Professional wireless communication system solution supplier

DP405

SERVICE MANUAL

V190409

ShenZhen Kirisun Communications Co.,Ltd.

Contents

1. Overview

1.1. Scope

This manual is intended for maintenance and repair of DP405 portable radio, and can only be used by engineers and professional technicians who are trained by Kirisun. The parameters in this manual may vary with technology improvement, so for updated technical information, please contact Kirisun or its local dealers.

Please carefully read this manual before repairing the radio.

1.2. Safety Precautions

Electromagnetic Radiation

Radios generate and radiate electromagnetic energy. The security design of Kirisun radio meets national and international standards on electromagnetic radiation. To ensure radio's optimal performance and safe electromagnetic radiation on human, please keep the radio vertical to the ground and 2-5 cms away from your mouth.

Electromagnetic Interference

To avoid electromagnetic interference, please turn off the radio wherever there are clear warnings, e.g. hospitals, health care centers, airports and other places where radios must be turned off.

Explosive and Harmful Gases

The radio should be turned off in areas where there are explosives and harmful gases, e.g. lower deck of the hull, fuel and chemical storage facilities and area where the air contains chemicals, particles, dust or metal dust.

Please turn off the radio when close to blasting area and electric blasting detonators.

Replacing or charging batteries in potentially explosive atmosphere is prohibited.

Antenna Damage

Do not use radios when the antenna is damaged. Damaged antenna may cause mild burning to human skin.

Replacing Components

When replacing components, please be aware of the model number. Do not arbitrarily replace any components that do not match Kirisun's requirement.

1.3. Maintenance Service

The radio and accessory are provided with warranty service. But if one of the following occurs, no free maintenance is offered.

- No valid warranty card or original invoice.

- Faults caused by unauthorized disassembly, repair and modification.
- Man-made damage such as wear, mechanical damage, burning, and waterlogging.
- Product serial number is damaged or the product brand is unable to identify.

After the warranty expired, lifetime service is still available. We also provide service components to service station and staff at favorable price.

2. External View and Operation Description

2.1. External View

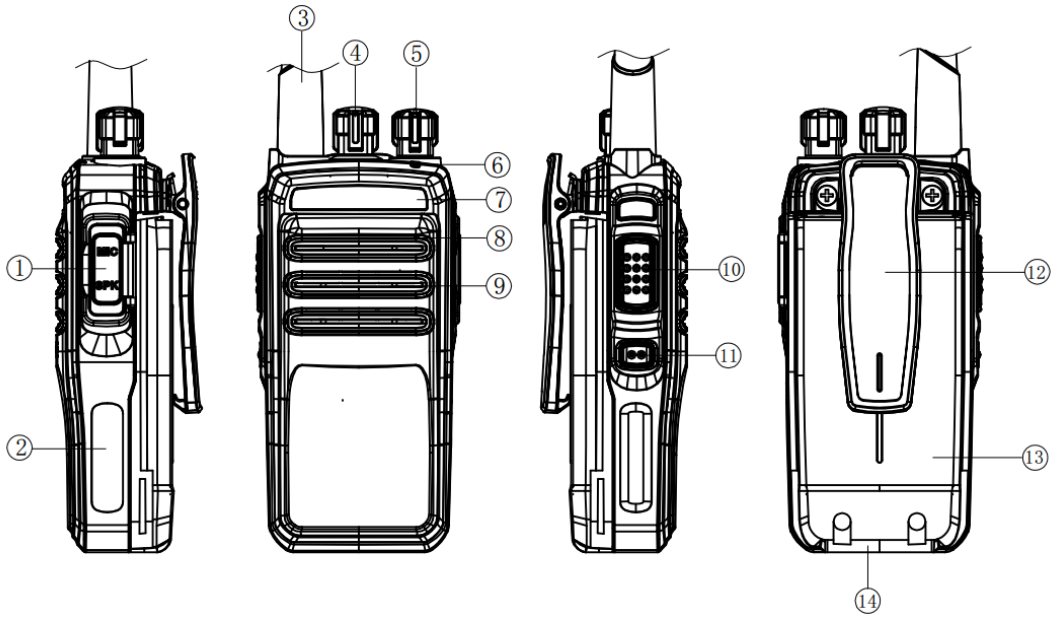

No.	Part Name	No.	Part Name
1	Mic Jack	2	Model Sticker
3	Antenna	4	Channel Knob
5	Volume Knob	6	Guide Beam
7	Logo Sticker	8	Mic
9	Speaker	10	PTT Key
11	Programmable Key	12	Belt Clip
13	Battery	14	Battery Clip

2.2. Operation Description

The programmable keys can be set as long press feature key or short press feature key according to user's

requirements. The available features are listed below:

No.	Feature	Usage
1	None	No feature
2	High/low Power	Press this key to switch high/low power.
3	Broadcast Call	Press this key to make a broadcast call.
4	Monitor	If there is CTCSS on the current analogue channel, press this key to switch to carrier squelch mode to cancel CTCSS feature. When the carrier is matched, the voice can be output. Press the key again to go back to the original status.
5	Emergency Alarm	Enable the emergency alarm feature to seek help in emergency.
6	Eemrgency Alarm Exit	End emergency alarm.
7	Squelch on/off	Press this key on the analogue channel to forcibly open the voice reception path and receive weak signals on the analogue channel. Pressing this key on digital channel is useless.
8	Zone Selection	Press this key to switch to the next zone.
9	Scan	Press this key to enable Scan and listen to activities on other channels; press it again to disable Scan.
10	Alert Tone on/off	Press this key to enabel all the alert tones and press it again to have them disabled.
11	Niusance Delete	Durng scan, when the radio detects an unnecessary channel, e.g. interference channel, the user can select Nuisance Delete menu to delete the channel before the scan continues.
12	Repeater/Talkaround	On the repeater channel, press this key to exit repeater mode.

2.3. LED Indication

LED Indication	Radio Status
Red LED glows	The radio is transmitting
Red LED flashes	The radio is in low power.
Green LED Glows	The radio is receiving signals (voice, data) or detects activity on channel
Green LED flashes	The radio is scanning
Orange LED flashes	The radio is in call hang status or receiving emergency alarm.

2.4. Basic Operation

Power on/off the Radio

When the radio is off, turn the volume knob clockwise until a click is heard to power on the radio; when the radio is on, turn the volume knob counter-clockwise until a click is heard to power off the radio.

Selecting the Channel

Turn the channel knob to select the channel.

Adjusting the Volume

Turn the volume knob to adjust the volume.

Initiaing a Call

Press PTT key and speak to the mic.

Receiving

When the radio receives the signal which matches the current channel, it will output the voice on channel.

3. Circuit Description

3.1. Circuit Composition

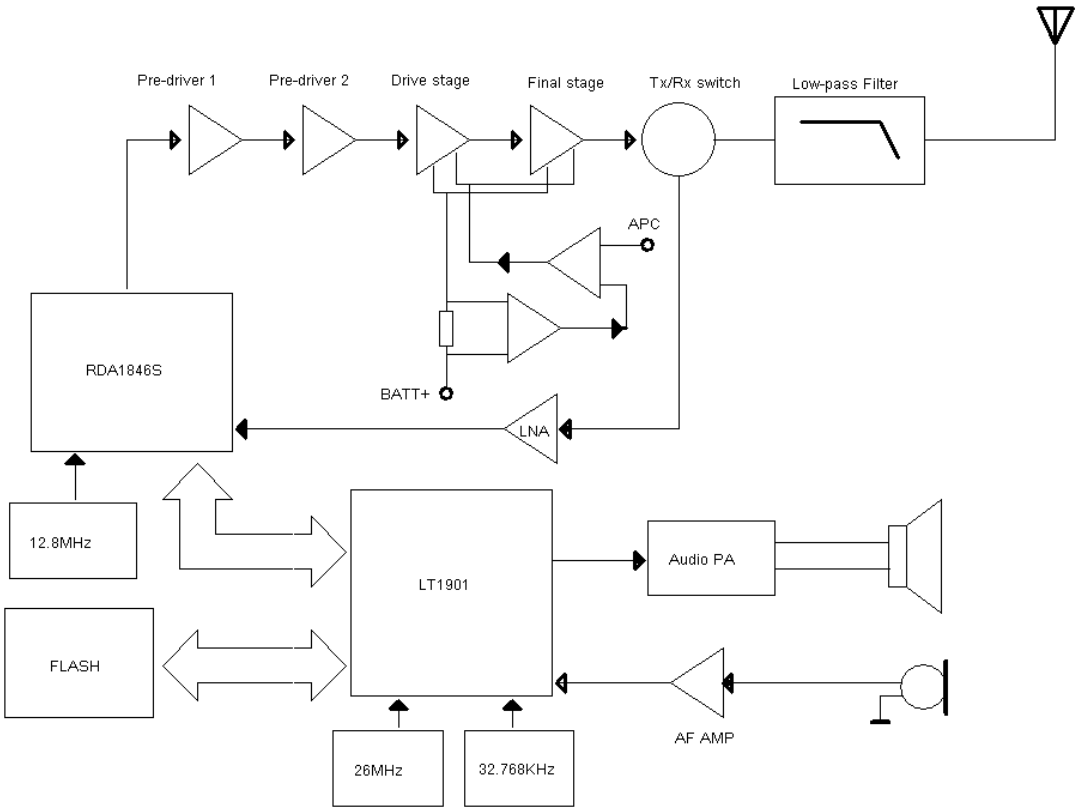

3.2. TX Circuit

The TX circuit is mainly composed of three parts below:

- RF Power Amplification Circuit

RDA1846S outputs RF signal from pin 18 and enters first-level pre-drive amplifier (Q502) for initial amplification; then it enters second-level pre-drive amplifier （Q503） and drive amplifier (Q501) for further power amplification, ensuring sufficient drive power signal can be offered to final amplifier for ultimate power amplification; after amplification by multiple amplifiers, the transmitted signal will complete the output impedance match at the output terminal of final power amplifier through a section of microstripe, so as to minimize output power loss from impedance match failure; afterwards, the transmitted signal will enter the low pass filter through TX/RX switch.

- Low Pass Filter Circuit

The low pass filter which suppresses harmonic wave is an advanced Chebyshev filter composed of lumped parameter inductor and capacitor. On a certain basis of in-band fluctuation, the filter can improve suppression to out-of-band harmonic wave and spurious signal.

- Automatic Power Control Circuit (APC)

In the automatic power control circuit, the drain current from drive power amplifier and final power amplifier completes switch from current to voltage through the sampling resistor and subtraction circuit which is made of the first operational amplifier; the voltage will be compared with the APC control voltage output from DAC at the second operational amplifier, and the error voltage that is output will change the transmitting power through the grid bias voltage of the control power amplifier tube (including the drive level and final level).

3.3. RX Principle

The RX circuit is mainly composed of RF low pass filter, RX/TX switch, low noise amplifier, RDA1846S, LT1901 and audio power amplifier.

- RX Circuit Front-end

The signal from antenna is sent to Q507 3SK318 and low noise amplifier (LNA) which is made of peripheral components though RX/TX switch for amplification, and the amplified signal will then be sent to U500 （RDA1846S）for demodulation and output.

- RX Circuit Back-end

The analogue/digital signal which is demodulated and output by RDA1846S, after completing demodulation and processing of digital signal through DSP in LT1901, will be input to digital audio processor module for further processing, and then be switched to analogue voice signal through DAC of codec; the analogue voice signal will finally be amplified by external audio amplifier to drive the speaker.

3.4. Power Section

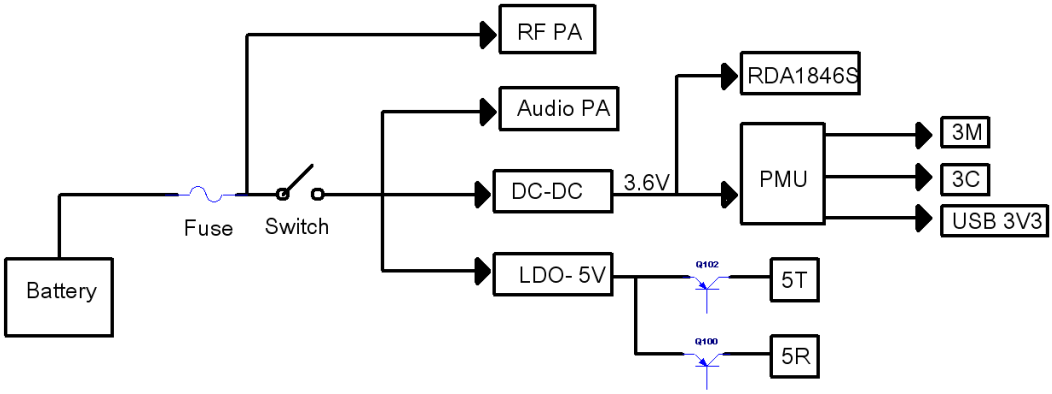

The radio applies 7.4V lithium-ion battery for power supply. RF power amplification and audio power amplification are directly powered by battery; the battery outputs 3.6V to supply power to PMU in RDA1846S and LT1901 through DC-DC switch; 3M, 3C and USB3.3V output from PMU separately supply power to other baseband circuits; the battery outputs 5V voltage through LDO and then outputs separate 5T and 5R after control by Q100 and Q102.

RF PA： RF Power Amplifier Circuit Q500（RD07MUS2B）， Q501（RD01MUS2）

Audio PA: Audio Power Amplifier Circuit U3（TDA8547TS）

3M： EEPROM IC200（AT24C512C）, encrypted IC U2（LTJMIC）

3C： Transistor X500（12.8M TCXO）

5T： RF Pre-drive Amplifer Circuit Q502 （2SC5108）、 Q503（2SC3356）

5R： Low Noise High Frequency Amplifier Circuit Q507（3SK318）

DC-DC： PMU IC1（LT1901）、U500（RDA1846S）

3.5. IC Description

RDA1846S Feature:

- Fully-integrated CMOS RF Front-end
- High Linearity Low Noise Amplifer and Mixer
- Low IF Receiver Path

  Auomatic DC offset Calibration Circuit

  High Performance analogue/digital converter and digital/analogue converter
  Fully-integrated Receiver Filter
- Digital AGC

  Modulation and demodulation technique based on digital signal processing technique

- TX Path of Direct Frequency Synthesis

  Modulation Method of Direct Frequency Synthesis

  TX Filter based on Digital Signal Processing Technique

  TX Modulation Gain Number is Adjustable

  Digital voice activates TX control
- High-performance Fractional PLL Frequency Synthesizer

  Fully-integrated In-chip RF VCO

  Fully-integrated Internal Loop Filter

  Low Phase Noise

  Fast Lock of Phase

  High-frequency Resolution with Random Frequency Adjustable

  Built-in Transistor Frequency Error Calibration Circuit
- Sleep Mode of Ultra Low Loss
- Three Wire Serial Digital Interface Control

3.6. Semiconductor Device Description

3.6.1. MCU Description

Pin No.	Port No.	Port Name	Definition
E11	GPIO_D44	JM_RST	Encrypted IC Reset
J19	BSENS	MAND_IN	Upside down IC level input
L22	ADC_IN	BAT_DET	Battery power check
W13	GPIO_D7	PF	Side key input
R14	GPIO_D6	BEEP_C	Received voice\alert tone switch control
W14	GPIO_D101	EERROM_WP	EEPROM
AA17	GPIO_D24	ECN_3	Channel switch
AB17	GPIO_D23	ECN_2	Channel switch
V15	GPIO_D11	KEYPAD5	4*4 key
V16	GPIO_D99	KEYPAD3	4*4 key
V17	GPIO_D100	MAND_C	Upside down IC power supply control

AA18	GPIO_D22	EXT_PTT	External PTT
U18	GPIO_D98	KEYPAD2	4*4 key
V19	GPIO_D96	KEYPAD0	4*4 key
U19	GPIO_D13	KEYPAD7	4*4 key
T19	GPIO_D14	NC_GPIO	NC
U21	GPIO_D12	KEYPAD6	4*4 key
T21	GPIO_D97	KEYPAD1	4*4 key
V22	GPIO_D10	KEYPAD4	4*4 key
F5	GPIO_D112	LCD_RS	LCD
AB19	LCD_CS1	LCD_RST	LCD
L21	SSI0_RX	SSI0_RX	FLASH
P21	SSI0_TX	SSI0_TX	LCD/FLASH
N21	SSN0	LCD_CS	LCD
M21	SSN1	FLASH_CS	FLASH
F6	GPIO_D111	NC	NC_GPIO
R21	SSI0_CLK	SSI0_CLK	LCD/FLASH
A12	VOUT_D9	VIO_3V_C	PMU_3V output
J14	GPIO_D76	UART_RXD0	Serial port 0
J15	GPIO_D75	UART_TXD0	Serial port 0
F22	BAT_DET	BAT_DET	Battery check
J18	GPIO_D25	UART_TXD1	Serial port 1
H18	GPIO_D26	UART_RXD1	Serial port 1
E17	GPIO_D74	TONE_OUT	Alert tone PWM output
E18	VSB	BATTERY	Clock button battery access
E21	SINK1	NC	NC
D23	SINK2	NC	NC
C18	GPIO_D88	I2C_SDA	EEPROM
A17	VOUT_D2	3M	PMU_3M output
C17	GPIO_D87	I2C_SCL	EEPROM

E14	GPIO_D49	NC	NC
C14	GPIO_D51	AFCO1	Audio power amplification MUTE
E13	GPIO_D48	5TC	5TC
A13	VOUT_D3	3C	PMU_3C output
C13	GPIO_D52	DACS_SW1	DA_MCP4802
B13	GPIO_D47	5RC	5RC
E12	GPIO_D50	LDAC_PC/TV	DA_MCP4802
C12	GPIO_D53	AFCO2	Speaker output MUTE
A11	GPIO_D46	RDA_PDN	RDA1846S
A10	GPIO_D58	SPI/CS	RDA1846S
F11	GPIO_D2		NC_GPIO
B11	GPIO_D57	SPI/CLK	RDA1846S
B10	GPIO_D56	SPI/DA_OUT	RDA1846S
F10	GPIO_D0	RDA_SQL	SQL
E10	GPIO_D3	KEYPAD_BL	Backlight control
K18	GPIO_D107	JM_CLK	New encrypted IC
B9	GPIO_D21	ECN1	Channel switch
A8	GPIO_D18	GREEN_LED	Green light control
B8	GPIO_D16	PTT	PTT
A7	GPIO_D19		NC_GPIO
B7	GPIO_D20	ECO_0	Channel switch
C7	GPIO_D17	RED_LED	Red light control
C3	AUX_OUTP	SPK+	Audio output after LT1901 demodulation
D3	AUX_OUTN	SPK-	NC
D1	M_MICP	AFDET	RDA1846S is sent to LT1901 after demodulation
D2	M_MICN	NC	NC
E2	HP_MICN	MIC1	MIC signal is sent to LT1901
H5	DM	USB_DM	USB
J5	DP	USB_DP	USB

L1	HPL_OUT	MOD1	Digital MIC signal output
M1	HPR_OUT	MOD2	NC
D21	SINK3	NC_SINK3	NC
B12	GPIO_D45	JM_SDATA	Encrypted IC
C11	GPIO_D55	NC_GPIO	NC
A9	GPIO_D59	APC_SW2	APC_SW2
C9	GPIO_D105	NC_GPIO	NC
C8	GPIO_D43	APC_SW1	APC_SW1
F15	GPIO_D8	NC_GPIO	NC
F14	GPIO_D9	QT/DQT IN	QT/DQT IN
F13	GPIO_D1	LCD_BL	LCD backlight control

3.6.2. RDA1846S Port Description

AVDD	1	Power supply
SCLK	2	Clock input for serial control bus
SDIO	3	Data input/output for serial control bus
AVDD	4	Power supply
XTAL1	5	Oscillator pin 1
XTAL2	6	Oscillator pin 2,control interface select
MODE	7	When MODE = VL, I2C Interface is select; When MODE = VH, SPI Interface is select
SENB	8	Latch enable (active low) input for serial control bus
AFOUT	9	Audio signal output to speaker
NC*	10	No connection
MIC_IN	11	MIC input
Cc	12	Compensation capacitor connection
AVDD	13	Power supply
NC*	14	No connection

RFIN	15	RF signal input
AVDD	16	Power supply
NC*	17	No connection
RFOUT	18	RF signal output
NC*	19	No connection
NC*	20	No connection
AVDD	21	Power supply
PABIAS	22	PA bias supply for PA
AVDD	23	Power supply
PDN	24	Chip enable,high active; Chip sleep,low active
GPIO7	25	Gpio7/vox(When Gpio7=VH, vox is active; else VL)
GPIO6	26	Gpio6 / sq (When Gpio6=VH, sq is active; else VL)
GPIO5	27	Gpio5 / txon (When Gpio5=VH, txon is active; else VL)
GPIO4	28	Gpio4 / rxon (When Gpio4=VH, rxon is active; else VL)
GPIO3	29	Gpio3 / sdo (Gpio3=VH or VL, it is the output register data in 4 wire control Interface mode)
GPIO2	30	Gpio2 / int (When Gpio2=VH, int is active; else VL)
GPIO1	31	Gpio1 / code_in / code_out (Gpio1=VH or VL, it is the input/output code data)
GPIO0	32	Gpio0 / css_in / css_out (Gpio0=VH or VL, it is the input/output CTCSS/CDCSS signal)

3.7. Semiconductor Device Feature Description

Position Mark	MODEL	Description
IC500	NJM2904	APC，voltage comparison, drive

U21	LT1901A	MCU
IC200	24LC512	E2PROM，saves channel frequency data, feature parameters and modulation parameters
U3	TDA8547TS	Receiver audio power amplification
Q500	RD07S2B	TX final power amplification
Q4	DTA144EE	APC output switch
Q507	3SK318	Receiver power amplifier
Q200	DTC144EE	Red LED driver
Q201	DTC144EE	Green LED driver
Q501	RD01MUS1	Transmitter power amplifier drive
Q601	DTC144EE	Audio power amplifier control switch
IC100	XC6204B502MR	5R,5T voltage output
IC102	MP2359	3.5V voltage DC-DC output
U20	MCP4802	DA chip, used for modulation of power and frequency stability
Q602 Q603	ST3400SRG	Audio output control switch
IC302	NJM2904	Operational amplifier IC, used for MIC signal amplification
Q502	2SC5108	Transmitter 1st amplification
Q503	2SC3356	Transmitter 2st amplification

4. Feature Description and Parameter Setting

4.1. Kill and Remote Monitor

Kill

Check this option to receive Kill command and the radio will be disabled.

Kill Decode

Check this option to receive Revive command and the radio will be restored to normal.

Remote Monitor

When the radio receives Remote Monitor command, it will automatically turn on the transmitting and the monitoring party can listen to the surroundings around the monitored radio.

4.2. Scan

Enabling Scan

Press the Scan programmable key to enable Scan and listen to activities on other channels. Press Scan key again to exit Scan.

Scan List

Each channel can be related to one “Scan List” though dealer programming. The radio can only start Scan on channels related with “Scan List”. Each “Scan List” contains a maximum of 16 channels (including the current channel), both analogue channels and digital channels can be contained. By selecting “Scan List” menu, you can check the scan channels included in the “Scan List” used by the current channel.

Note:

if the scan channels in the list are changed, other channels which are related with the same list will be affected during channel scan.

Nuisance (Temporary) Delete

During scan, when the radio stops on an unnecessary channel, e.g. intereference channel, it can select Nuisance Delete to delete this channel before it goes on scanning. You can also add a temporary channel during scan.

After exiting scan mode, the channel which is temporarily deleted or added will turn invalid.

Scanning the Revert Channel

During radio scan, press the PTT key to enable the radio to transmit or talk on the preset channel. This channel can be set by local dealer using programming software.

4.3. Zone

A group of available channels can compose a zone. The zone can be selected through programmable key.

4.4. Setting

You can set the radio parameters according to personal requirements. The parameters include power, squelch level, whisper, auto keypad lock, alert tone, home screen display, power-saving mode, language, voice intensificaton, vice encryption and etc.

Power

High power enables communication of longer distance but leads to shorter battery use while lower power enables communication of shorter distance but leads to longer battery use. The power level of each channel can be separately set.

Squelch Level

The squelch is leveled from 0 to 9, and higher level means smaller interference from noise or other unnecessary signals but it is difficult to receive weak signals.

Whisper

Enable Whisper and talk to the mic, and the called party can hear the voice clearly.

Alert Tone

The aler tone can be set by PC software and you can enable/disable all kinds of alert tone.

Power-saving mode

Enable/disable the power-saving mode, which extends the battery use duration

Voice Encryption

Enable/diable Voice Encryption feature on the current channel.

4.5. TOT （Time-out-timer）

This feature prevents long occupation on the channel. If the continuous transmitting time exceeds the preset time, the radio will stop tranmistting and sound alert tone. To stop the alert tone, please release the PTT key. For the next transmitting, please press the PTT key after a certain interval (set by dealer). If the pre-alert feature is enabled by dealer, a pre-alert will sound right before the TOT time, indicating the coming tramission limit.

4.6. Emergency Alarm

Press Emergency Alarm programmable key during emergency. The emergency alarm is composed of two parts: alarm type, which specifies voice and sound reaction during emergency, and alarm mode, which specifies the transmission contents sent to other members during emergency. To disable emergency alarm, please press emergency alarm exit shortcut key.

Alarm Type:

- None: no alarm feature (default);
- Siren Only: only sounds alarm on the radio;
- Conventional: sounds alarm with voice and light alert and other radio response can be received;
- Secret: no voice or light alert and it cannot receive response from other radios;
- Secret with voice: no voice or light alert but it can receive response from other radios.

Alarm Mode:

- Emergency Alarm: after the alarm is initiated, the radio sends only emergency alarm. It exits the alarm status afterwards.
- Emergency Alarm+Emergency Call: the radio sends emergency alarm but also sends emergency call if PTT key is pressed.
- Emergency Alarm + Background Tone Auto Transmission: the radio sends emergency alarm and also sends automatic background tone periodically.

Note:

- *Emergency Alarm: the radio sends a kind of non-speech signal to trigger alarm on other radios.*
- *Emergency Call: a kind of call mode with higher priority than other conventional calls, which ensures fluent call during emergency.*

4.7. Feature Setting

The radio will be pre-set before delivery, but due to different requirements by users, parameters such as digital features, working frequency, channels, QT/DQT, auto scan or others may be re-set. Kirisun designed user-friendly programming software with easy operation to program DP405.

Programming procedures is listed as follows:

A. Install DP405 programming software;

B. Use a programming cable to connect the radio and PC.

For detailed instruction, please refer to Help file in the programming software and DP405 user guide.

5. Attaching and Detaching

This radio is a sophisticated communication device with precise and compact structure. Please be careful with the repair.

5.1. Attaching and Detaching the Battery

Detaching the Battery

Make sure the radio is turned off when detaching the battery.

Push the battery latch in the direction as ① shows; the radio will pop up as ② shows; press the belt clip as ④ shows to detach the battery.

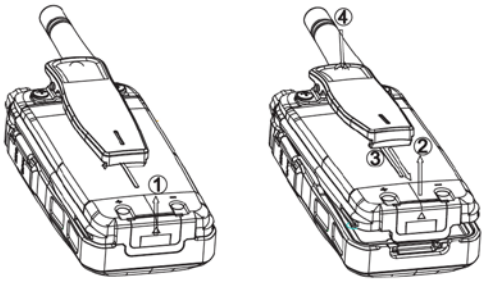

Attaching the Battery

Press ① to pop up the belt clip, and align the battery with the aluminum shell to insert the battery in the direction as ② shows; press the bottom of battery until it is locked.

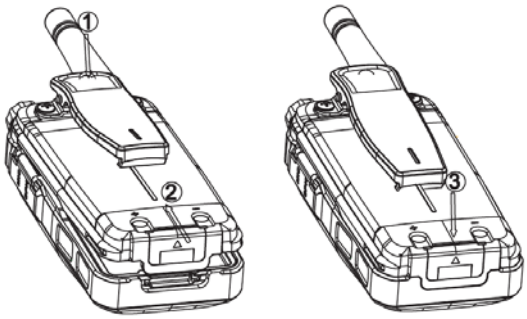

Note：

- *Please do not throw the battery terminal or battery into fire.*
- *Do not take the liberty of taking out the battery shell.*

5.2. Attaching and Detaching the Antenna

To attach the antenna, insert the antenna on the top of the radio and turn it clockwise until it is fastened;

To detach the antenna, turn it counter-clockwise to loosen it.

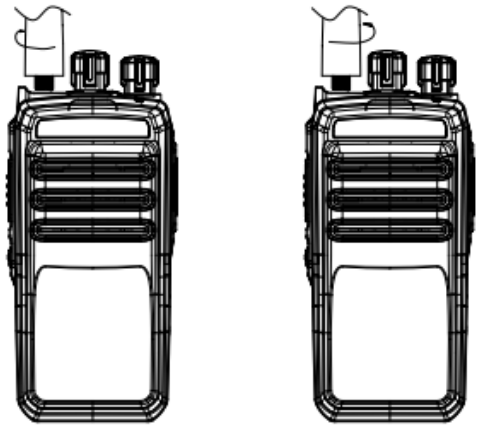

5.3. Installing the Earphone

Open the cover board on the right side of the radio, and insert the earphone plug into the interface.

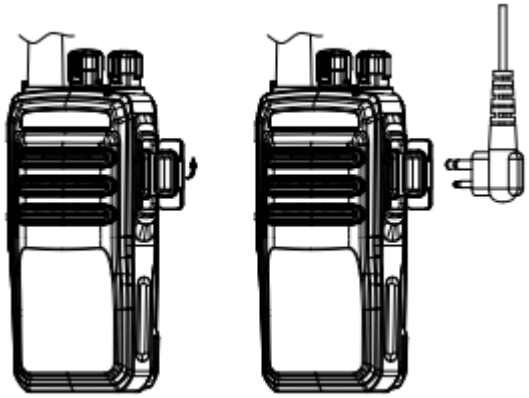

5.4. Detaching the Housing from the Chassis (see figure below)

(1) Detach the antenna;

(2) Detach the two knobs and circlips;

(3) Detach the two knob nuts and antenna nut;

(4) Detach the two screws as shown below;

(5) Insert a flat screwdriver into the aluminum bracket and pry the bracket; take out the bracket and take out the soft flat cables.

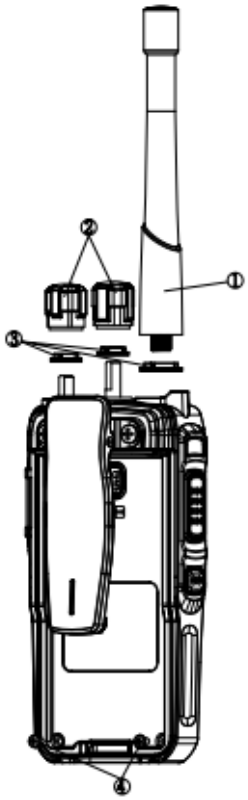

5.5. Detaching the Motherboard from the Chassis (see figure below）

Take out the screws;

Take out the top waterproof pad and use the soldering iron to detach the antenna; the motherboard (including PTT and PCB) and aluminum bracket can be therefore detached. Be careful when you take out the motherboard and do not damage the connection between PTT PCB and motherboard.

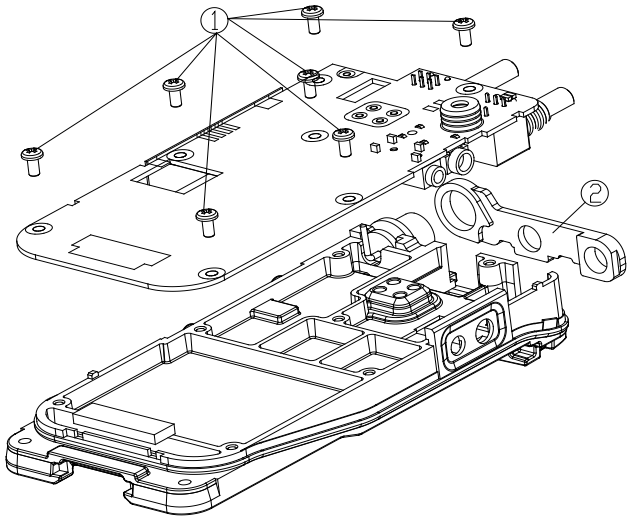

After the disassembly is finished, the repair and modulation can then be performed.

5.6. Exploded View

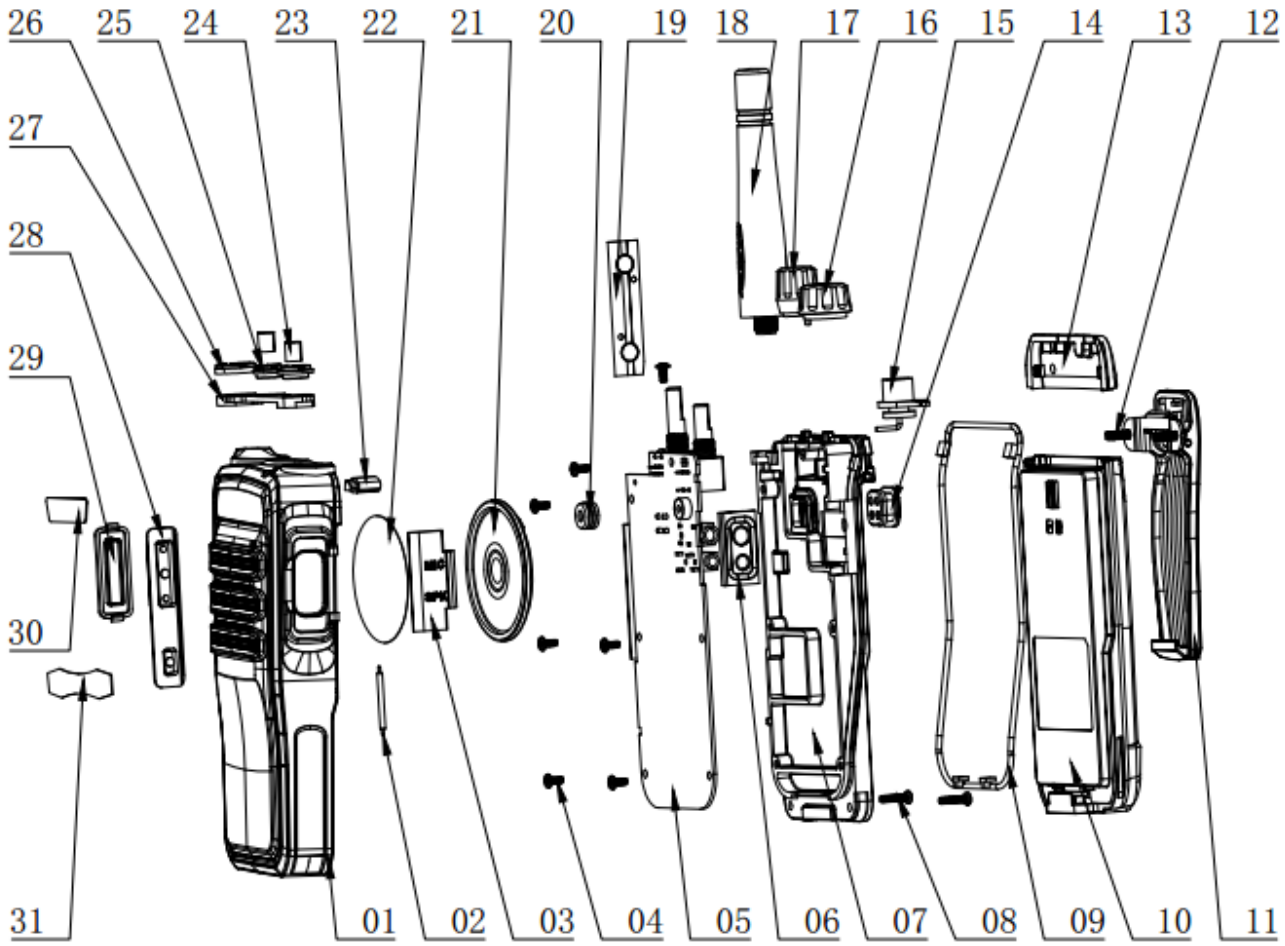

No.	Material No.	Material Name	Description	Quantity
1	7MHP-4169-01B-W0	DP405 front cover	PC365，black+grey, textured	1
2	7MJS-4038-01A-W0	S760 shaft	SUS304;	1
3	7MHP-4097-01A-W0	S565 earphone cover	TPU, black, textured	1
4	7SMF-020040M-SZYB-N	M2*4 cross machine screw	Hardened iron,Φ2mm*4mm	8
5		Motherboard PCBA	DP405 PCBA	1
6	7MHP-4097-02A-W0	Earphone jack waterproof pad	TPU; black, textured	1
7	7MHL-4141-01A-N	Aluminum Shell	ADC12; nickel-plated;	1
8	7SMF-020080M-MHHT-N 1	M2*8 torx machine screw	Hardened iron,Φ2mm*8mm	2
9	7MHR-4038-02A-W0	Main waterproof ring	Silica gel; black, high-gloss	1

10	6SS3-DC4140-B	Battery	Lithium-ion, 7.4V 2000mAh	1
11	6SS3-BJ4038-B	KBJ-17 belt clip	S760/DP405 belt clip	1
12	7SMF-025080M-SZYB-Z1	M2.5*8 cross machine screw	Hardened iron Φ2.5mm*8mm	2
13	7MHP-4169-02A-W0	DP405 top cover	PC365, black	1
14	7MHR-4038-05A-W0	Pin Socket	Silica gel; black,	1
15	3CR7-SMA-50JF-4	RF Coaxial Connector	SMA-J, flange plate installation	1
16	7MHP-4141-04B-W0	Volume Knob	ABS, black	1
17	7MHP-7210-03B-W0	PT567 Channel Knob	ABS, black	1
18	8ATX-400470-W5	Antenna	400-470MHz,SMA-K, 155mm	1
19	7MHS-4038-02B-W	PTT key metal dome	φ6mm,SUS301	1
20	7MHR-1727-09A-W3	Mic cover	Silica gel, hardness 40, orange	1
21	4SS7-4005-016-100C	Speaker	Φ40, impedance 16Ω, power1W	1
22	7GCB-360001-W0	φ36 speaker waterproof net	Diameter φ36mm* thickness 0.1mm	1
23	7MHR-4169-02A-WC	DP405 guide beam	Silica gel	1
24	7NRC-060090035-W1	Channel nut	Internal diameter 6mm, external diameter φ9mm, thickness 3.5mm	1
25	7NRC-060090035-W1	Channel nut	Internal diameter M6mm, external diameter φ9mm, thickness 3.5mm	1
26	7NRC-090110025-W1	Antenna nut	Internal diameter M9mm, external diameter φ11mm, thickness 2.5mm	1
27	7MHR-4038-04A-W0	Top waterproof pad	Silica gel;	1
28	7MHR-4169-01A-W0	DP405 PTT key	Silica gel; black	1
29	7MHP-4169-05B-W0	DP405 PTT key	PC365，black+orange	1
30	7PLJ-4169-E01A	DP405 logo sticker	Transparent PC , 39.8*6.9mm	1

6. Modulation and Test

6.1. Method

During the repair, if the components are changed, you need to test and adjust theh technical specification.

6.1.1. Components needed for adjustment

（1）antenna interface converter

（2）universal interface

6.1.2. PC Test Mode Modulation Method:

Tx Section

Tx Frequency

Under computer mode(frequency stability), adjust Tx frequency as reference frequency within ±100Hz.

B. Power

a.under computer mode(Tx high power)(five frequencies), adjust Tx high power as 3.5-5.0W.

b.under computer mode(Tx low power) (five frequencies), adjust Tx low power as 0.5-1.5W.

C. Battery low power indication during transmission: set power voltage as 6.5V, and under computer mode (Tx low voltage), click Ok after digits are stable.

Rx Section

Maximum Volume

Set the RF frequency of integrated tester as center frequency, signal strength as 1mV, modulated frequency deviation as 3.0 kHz /1.5kHz（wide/narrow band）. Under computer mode(max volume, wide/narrow band), adjust audio power as 1.2-1.5W.

B.Squelch

a. RF signal is set to -121dBm, modulated frequency deviation to 3.0kHz/1.5kHz（narrow/wide band）. Under computer mode (SQL on, narrow/wide band) (five frequencies), click Ok when the value is stable.

b. RF signal is set to -123dBm, modulated frequency deviation to 3.0kHz/1.5kHz（wide/narrow ban）. Under computer mode (SQL off, narrow/wide band) (five frequencies), click Ok when the value is stable.

6.2. Radio Test

(1)Volatge used in test: 7.5V +/-0.1V room temperature

(2)Frequency range:

S760:400MHz～470MHz

Note:

the frequency above can be programmed by software.

Operation method:

a）Open the programming software;

b）Click Edit menu (or use shortcut key Tv), select the test frequency in the drop-down menu;

c）Edit the frequency in the popped-up edit list.

The specifications should be tested in the test mode:

Rx Section

1. Sensitivity: <=-119dBm(0.25uV)(wide band, narrow band) 12dB SINAD

2. Distortion: <=5%

3. Current: static current :<=100mA

Received working current: <=400mA

4. Squelch off Sensivitity: when RF input ≤-124dBm, squelch off.

5. Squelch on Sensitivity: when RF input ≥-119dBm, squelch on.

Tx Section

1. Output Power: high (3.8W---4.8W) low (0.7W---1.3W)

2. Tx Current: high power Tx<= 1.6A; low power Tx <=1.0A

3. Tx Distortion: <=5%

4. Tx Frequency Deviation: reference frequency +/-500Hz

5.Undervoltage Indication: when voltage is 6.2V, the red indicator should flash when pressing PTT, and no Tx power occurs.

7. Main Technical Performance and Specification

Product	DP405
Frequency	(136 ~ 174) MHz (350 ~ 400) MHz (400 ~ 470) MHz (400 ~ 520) MHz
Channel Capacity	16 zones*16 channels
Channel Spacing	25 kHz/12.5kHz
Working Voltage	7.4V negative pole connected to ground
Working Temperature	-25℃~ +55℃

Antenna Impedance	50Ω
Mic Impedance	2.2kΩ
Battery	Lithium-ion battery DC 7.4V , 2000mAh
Rx Sensitivity (12dB SINAD)	-119dBm
Squelch on Sensitivity（level 2）	≤-120dBm
Adjacent Channel Selectivity	≥70dB/≥60dB
Intermoducation Anti-interference	≥65dB
Spurious Response Anti-interference	≥70dB
Audio Output Power	0.5W，@distortion≤5%，16Ω
Consumption Current	≤400mA
Tx Power	UHF 4W/1W VHF 5W/1W @7.4V DC
Frequency Stability	≤ ±2.5ppm
Max Frequency Deviation	±5kHz/±2.5kHz
ModulationDistortion（300~3000Hz）	≤ 3%
Adjacent Channel Tx Power	≤-60dbm/≤-50dbm
Spurious Emission	≤-36dB
Consumption Current	≤1.5A @ 7.4V DC

8. Maintenance and Test Equipment

Equipment	Specification
Standard signal generator	Frequency range: 400-470MHz Modulation:frequency modulation and external modulation Ouput:－127dBm/0.1uv to －47dBm/1mv and above
Dynamometer	Input impedance:50Ω Operation frequency:400-470MHz Measurement range:around 10W
Frequency deviation meter	Frequency range:400 - 470MHz
Voltmeter	Measurement Range:DC 10mv - 10v Input impedance:input impedance for min. circuit load

Oscilloscope	DC 30MHz
High-sensitivity frequency Counter	Frequency range:50Hz - 10KHz Frequency stability:0.2ppm or lower
Ammeter	5A
Audio frequency voltmeter	Frequency range: 50Hz - 10KHz Voltage range: 1mv - 10v
Audio generator	Frequency range:50Hz - 5KHz or higher Output:0 -1v
Distortion tester	Capacity:at 1KHz, ≤3% Input level :50mv - 10vms
Spectrum analyzer	Measurement range:DC to 1GHz or higher
Path generator	Center frequency:50KHz - 600MHz Output voltage:100mv or higher
13.16Ω dummy load	Around 16Ω，3W
Adjustable power	5v - 10v, around 5A

9. Troubleshooting

No.	Description	Cause and Solution
1	Failed to power on the radio	A. The battery may be in low power. Change toa new battery or change the battery. B. The power switch is broken. Change to a new one. C. CPU is broken. Change to a new IC.
2	PLL lost lock	A. PLL xrystal oscillator X500 is broken. Change to a new one. B. RDA1846S is broken. Change to a new one
3	Failed to talk	A. The frequencies on both parties are different. Choose a channel of the same frequency. B. The two parties have different CTCSS/DCS. Reset CTCSS/DCS C. Beyong the communication range.
4	Failed to receive signal	A. Improper antenna contact. Fix the antenna tight. B. The sensitivity is low. Adjust the sensitivity in tune mode. C. the squelch level is high so the squelch cannot be turned on. Reset the squelch level.
5	The red indicator glows when	A. Power amplifier has no power output. Change to a new amplifier.

	transmitting, but the called radio cannot hear anything	B. The microphone is broken. Change to a new one.
6	The green indicator glows when receiving, but no sound is received	A. The speaker is broken. Change to a new one. B. The audio power amplifier U3 is broken. Change to a new IC. C. Th switch tube Q602 Q603 is broken. Change to a new one.
7	Failed to write the programming data	A. Worng cable connection. Check the connetion B. The programming drive is not well installed. Re-install the driver.

Appendix 1 Abbreviations

AMP amplify, amplifier

ANT antenna

APC automatic power control

BPF band pass filter

CTCSS continuous tone control squelch system

DCS Digital code squelch

DEMOD demodulation

E2PROM

HPF high pass filter

IDC instantaneous deviation control

IF intermediate frequency

LED Light-Emitting Diode

LNA low noise amplifier

LPF low pass filter

MCU micro control unit

MIC microphone

MOD modulation

MONI monitor

PLL phase lock loop

PTT push-to-talk

RX receiver

SPK speaker

TCXO temperature control X' oscillator

TX transmitter

UL un-lock

VCO voltage control oscillator

Appendix 2 Material List（electronic section）

List 1 DP405－02 Motherboard material list

No.	Part No.	Part Name	Description	Quantity	Position
1	4SM7-6027-A40B	mic	Φ6.0mm, height 2.7mm,-40dB±2dB,all direction,2.2KΩ,	1	MIC600
2	3CE3-CZ25-D	2.5mm earphone jack	PJ-208B, height 4.5mm,pin length 2.5mm; lead-free	1	J601
3	3CE3-CZ35-F	3.5mm earphone jack	PJ-3511-0 lead-free, with switch	1	J600
4	2RW3-RP08110SNJX-V01	Volume switch	RP08110SNJX-V01-0001	1	POW&VOL
5	3SE3-RE08220HX-V02	Channel switch	4.75mm shaft,	1	S200
6	6PM7-4169-HMB	DP405 UHF motherboard	DP405-02_MAINBOARD_160512,	1	
7	2RS1-10-000O	R flake resistor	1005,0Ω	30	C28,R45,C32,R109,R14,R167,R11,R251,R252,C569,C570,C577,R17,R504,R516,R555,R32,C19,R624,R41,R26,R48,R43,R71,R72,R15,C44,C45,C73,C74

8	2CC1-10-X7R160-104K	R flake ulti-layer capacitor	1005,100nF±10%,16V,X7R	18	C27,C100,C101,C111,C114,C117,C13,C18,C346,C22,C33,C43,C601,C608,C616,C15,C16,C56
9	2CC1-10-X7R500-471K	R flake ulti-layer capacitor	1005,470P±10%,50V,X7R	40	C102,C104,C107,C113,C118,C122,C6,C14,C230,C231,C232,C233,C332,C522,C523,C528,C530,C531,C532,C533,C535,C537,C538,C541,C549,C550,C551,C552,C553,C554,C559,C564,C565,C567,C568,C21,C333,R25,C624,C519
10	2CC1-10-C0G500-221J	R flake ulti-layer capacitor	1005,220P±5%,50V,C0G	2	C604,C609
11	2CC1-20-Y5V160-106Z	flake multi-layer capacitor	2012,10uF+80%/-20%,16V,Y5V	10	C123 C108 C103,C106,C119,C20,C39,C582,C615,C602
12	2CT1-TP20-100-100M	R SMD tantalum capacitor	2012,10μF±20%,10V	2	C116,C121
13	2CC1-10-X7R500-332K	R flake ulti-layer capacitor	1005,3300P±10%,50V,X7R	1	C26
14	2CC1-10-X7R500-103K	R flake ulti-layer capacitor	1005,10nF±10%,50V,X7R	12	C221,C222,C49,C110,C112,C115,C12,C17,C529,C539,C540,C600
15	2CC1-10-X7R500-153K	R flake ulti-layer capacitor	1005,15nF±10%,50V,X7R	1	C547
16	2CC1-10-X7R500-102K	R flake ulti-layer capacitor	1005,1000P±10%,50V,X7R	10	C120,C124,C536,C562,C563,C573,C581,R20,C526,C42
17	2CC1-10-X7R500-273K	R flake ulti-layer capacitor	1005,27nF±10%,50V,X7R	1	C545

18	1DR1-NSR1020MW2T1G	SMD schottky diode	NSR1020MW2T1G lead-free	1	D101
19	7MDC-4057-02A-G	Battery pin	Brass, lead-free	4	DC
20	3FW1-42932-302320	R SMD fuse	(SC)429003/433003/466003,3216,3A/32V	1	F100
21	1IL1-TDA8547TS	E general linear IC	Audio power amplifier ,TDA8547TS,SSOP20,	1	U3
22	1IS1-XC6204B502MR	R SMD volatge regulator IC	5V,SOT-23-5	1	IC100
23	1IS1-MP2359	SMD switch power IC	MP2359,6PIN,1.2A 24V,1.4MHz,TSOT-23-6	1	IC102
24	2RS1-16-000O	R flake resistor	1608,0Ω	11	L3,L30,L100,L102,L104,L105,L8,L33,L510,R519,R9
25	2LW1-35UF-472KB	SMD wire wound inductor	3.5*3.0*2.1,4.7UH±20％,PIO32-4R7MT, lead-free	1	L107
26	1TT1-KTA1298-Y	R SMD triode	KTA1298-Y,SOT23	2	Q100,Q102
27	1TF1-SSM3K15AFS	R SMD field effect tube	SSM3K15AFS（D1）	1	Q6
28	1TT1-DTC144EE	R SMD triode	Digital triode DTC144EE(26),SOT323	9	Q101,Q103,Q200,Q201,Q601,Q604, Q606,Q4,Q707
29	2RS1-10-103J	R flake resistor	1005,10K±5%	17	R240,R241,R242,R243,R100,R103,R110,R13,R245,

					R28,R30,R614,R617,R46,R68,R70,R57
30	2RS1-10-222J	R flake resistor	1005,2.2K±5%	5	R101,R102,R1,R246,R247
31	2RS1-10-274J	R flake resistor	1005,270K±5%	1	R105
32	2RE1-10-1602	SMD precise resistor	1005,16.2K±1%	1	R106
33	2RS1-10-104J	R flake resistor	1005,100K±5%	5	R107,R549,R526,R63,R51
34	2RS1-10-102J	R flake resistor	1005,1K±5%	17	R108,R236,R237,R238,R239,R502,R539,R544,R545,R547,R551,R560,R623,R10,R6,R3,R60
35	2CC1-10-X7R160-333K	R flake multi-layer capacitor	1005,33nF±10%,16V,X7R	3	C47,R12,C583
36	6SS2-4038-HL1B	LT1901 module set	LT1901 module	1	IC1
37	1IM1-LTS1901A-DP405	Liantuo encrypted IC DP405	Encrypted chip LTS1901A-DP405, lead-free	1	U2
38	1IS1-MCP4802-A	D/A switch IC	MCP4802	1	U20
39	2CC1-10-C0G500-101J	R flake multi-layer capacitor	1005,100P±5%,50V,C0G	4	C625,C24,C512,C48
40	1DR1-ESD9B5	TVS diode	ESD9B5.0ST5G,5V，SOD923, lead-free	2	D18,D19

41	2CC1-10-C0G500-560J	R flake multi-layer capacitor	1005,56P±5%,50V,C0G	1	C543
42	2RS1-20-000O	R flake resistor	2012,0Ω	1	C337
43	4PE1-16-F2	SMD LED	1608, red light	1	D203
44	4PE1-16-F5	SMD LED	1608,green light	1	D205
45	1IM1-AT24C512C	SMD memorizer IC	AT24C512C	1	IC200
46	1IL1-NJM2904V	SMD linear IC	NJM2904V,TSSOP-8	3	IC301,IC500,IC302
47	5FE1-BLM11A601S	SMD EMI suppression filter	1608,BLM11A601S/BLM18AG601S(0138-05)	7	L517,L515,L521,L32,L600,L300,L29
48	2RS1-10-220J	R flake resistor	1005,22Ω±5%	3	R511,R543,R604
49	2RS1-10-473J	R flake resistor	1005,47K±5%	11	R4,R227,R501,R508,R513,R540,R541,R557,R558,R61,R62
50	2RS1-10-683J	R flake resistor	1005,68K±5%	1	R21
51	2RS1-10-822J	R flake resistor	1005,8.2K±5%	1	R22
52	2RS1-10-153J	R flake resistor	1005,15K±5%	4	R23,R512,R542,R53
53	2RS1-10-100J	R flake resistor	1005,10Ω±5%	3	R244,R559,R66
54	2RS1-10-221J	R flake resistor	1005,220Ω±5%	2	R249,R250

55	2RS1-10-204J	R flake resistor	1005,200K±5%	2	R340,R52
56	2CC1-16-C0G500-300J	R flake ulti-layer capacitor	1608,30P±5%,50V,C0G	2	C500,C501
57	2CC1-16-C0G500-2R0C	R flake ulti-layer capacitor	1608,2P±0.25P,50V,C0G	2	C503,C514
58	2CC1-16-C0G500-1R5C	R flake ulti-layer capacitor	1608,1.5P±0.25P,50V	1	C504
59	2CC1-16-C0G500-3R0C	R flake ulti-layer capacitor	1608,3P±0.25P,50V,C0G	1	C505
60	2CC1-10-C0G500-330J	R flake ulti-layer capacitor	1005,33P±5%,50V,C0G	2	C506,C521
61	2CC1-16-C0G500-150J	R flake ulti-layer capacitor	1608,15P±5%,50V,C0G	2	C507,C509
62	2CC1-16-C0G500-6R0C	R flake ulti-layer capacitor	1608,6P±0.25P ,50V	1	C515
63	2CC1-16-C0G500-120J	R flake ulti-layer capacitor	1608,12P±5%,50V,C0G	1	C508
64	2CC1-16-C0G500-680J	R flake ulti-layer capacitor	1608,68P±5%,50V,C0G	1	C510
65	2CC1-16-C0G500-121J	R flake ulti-layer capacitor	1608,120P±5%,50V,C0G	1	C511
66	2CC1-16-C0G500-	R flake ulti-layer	1608,5P±0.25P,50V,C0G	1	C513

	5R0C	capacitor			
67	2CC1-16-C0G500-4R0C	R flake ulti-layer capacitor	1608,4P±0.25P,50V,C0G	1	C516
68	2CC1-10-C0G500-6R0C	R flake ulti-layer capacitor	1005,6P±0.25P,50V,C0G	2	C520,C561
69	2CC1-20-X7R6R3-475K	R flake ulti-layer capacitor	2012,4.7uF,6.3V,X7R	3	C50,C51,C617
70	2CC1-10-C0G500-470J	R flake ulti-layer capacitor	1005,47P±5%,50V,C0G	2	C558,C560
71	2CC1-10-X7R500-271K	R flake ulti-layer capacitor	1005,270P±10%,50V,X7R	1	C36
72	2RS1-10-561J	R flake resistor	1005,560Ω±5%	1	C578
73	2CC1-10-X7R250-223K	R flake ulti-layer capacitor	1005,22nF±10%,25V,X7R	1	C584
74	1DS1-1SS390	SMD switch diode	1SS390,1608	2	D500,D501
75	1DS1-1SS381	Switch diode	1SS381	1	D502
76	2LW1-16UC-270J	R SMD wire wound inductor	1608,27nH±5%,	1	L6
77	2LH1-R401R5-R02-05	SMD air core inductor	wireφ0.40, internal diamter φ1.5, high pin	1	L500

78	2LH1-R401R5-R03-05	R SMD air core inductor	wireφ0.40, internal diamterφ1.5, pin height 0.5mm	3	L501,L503,L505
79	2LH1-R401R5-R04-05	R SMD air core inductor	wireφ0.40, internal diamterφ1.5, pin height 0.5mm,	1	L502
80	2LL1-16-2N7S	Multilayer inductor	1608,2.7nH±2%(MLG1608B2N7S)	1	L504
81	2LH1-R501R5-L05-05	R SMD air core inductor	wireφ0.50, internal diamterφ1.5, high pin	1	L506
82	2LH1-R401R5-R08-05	R SMD air core inductor	(SC) wireφ0.40, internal diamterφ1.5, high pin	1	L507
83	2LW1-20UC-221J	R SMD wire wound inductor	2012,220nH±5%, ceramic core	1	L508
84	2LL1-16-22NJ	R Multilayer inductor	1608,22nH±5%(MLG1608B22NJ)	2	L511 L509
85	5FE1-BLM21P300S	R SMD EMI suppression filter	2012,BLM21P300S/BLM21PG300S(0149-05)	2	L512,L514
86	2CC1-20-X7R500-471K	flake multi-layer capacitor	2012,470P±10%,50V,X7R	1	L520
87	1TF1-RD07MUS2B	SMD field effect tube	RD07MUS2B, lead-free	1	Q500
88	1TF1-RD01MUS2	SMD field effect	RD01MUS2	1	Q501

		tube			
89	1TT1-2SC5108-Y	R SMD triode	2SC5108-Y(MC),NPN	1	Q502
90	1TT1-2SC3356-R24	R SMD triode	2SC3356-R24,SOT23,NPN	1	Q503
91	2RS1-10-392J	R flake resistor	1005,3.9K±5%	2	R24,R632
92	2RS1-10-472J	R flake resistor	1005,4.7K±5%	4	R39,R561,R562,R35
93	2RS1-10-470J	R flake resistor	1005,47Ω±5%	1	R500
94	2RS1-10-682J	R flake resistor	1005,6.8K±5%	1	R503
95	2RS1-10-271J	R flake resistor	1005,270Ω±5%	1	R505
96	2RS1-10-152J	R flake resistor	1005,1.5K±5%	1	R507
97	2RS1-10-563J	R flake resistor	1005,56K±5%	2	R509,R38
98	2RS1-10-203J	R flake resistor	1005,20K±5%	2	R529,C4
99	2RS1-10-330J	R flake resistor	1005,33Ω±5%	1	R510
100	2RS1-16-271J	R flake resistor	1608,270Ω±5%	1	R515
101	2RS1-16-333J	R flake resistor	1608,33K±5%	1	R8
102	2RS1-16-224J	R flake resistor	1608,220K±5%	1	R42
103	2RE1-16-1003	SMD precise resistor	1608,100K±1%	2	R527,R528

104	2RE1-16-1503	R SMD precise resistor	1608,150K±1%	2	R518,R525
105	2RS1-16-225J	flake resistor	1608,2.2M±5%	1	R517
106	2RS1-32-R39J	R flake resistor	3216,0.39Ω±5%	4	R520,R521,R522,R523
107	2RS1-10-154J	R flake resistor	1005,150K±5%	2	R550,R44
108	2RS1-10-184J	R flake resistor	1005,180K±5%	1	R553
109	1TC1-UMC4	R SMD composite tube	UMC4,NPN/PNP composite tube	1	U301
110	1IS1-RDA1846S	SMD specialized IC	RDA1846S,PLL module IC，5*5mm，32PIN,QFN32, lead-free	1	U500
111	5OT1-12R8-CEC3-0503	R SMD temperature compensated crystal oscillator	NT5032SA,12.8MHz±2.5PPm,5.0*3.2*1.6mm	1	X500
112	2CC1-10-X7R160-683K	R flake ulti-layer capacitor	1005,68nF±10%,16V,X7R	1	C23
113	2CC1-10-X7R160-473K	R flake ulti-layer capacitor	1005,47nF±10%,16V,X7R	1	C40
114	2CC1-10-X7R500-182K	R flake ulti-layer capacitor	1005,1800P±10%,50V,	1	C31
115	2CC1-10-C0G500-	R flake ulti-layer	1005,10P±0.5P,50V,C0G	1	C35

	100D	capacitor			
116	2RS1-10-333J	R flake resistor	1005,33K±5%	3	R18,R31,R616
117	1DS1-1SS372	SMD switch tube	Double diode	1	D4
118	1TT1-2SC4116-G R	R SMD triode	2SC4116-GR	1	Q2
119	1TF1-ST3400SRG	SMD filed effect tube	ST3400SRG,SOT-23，	2	Q602,Q603
120	1TT1-2SA1586	R SMD triode	2SA1586	1	Q605
121	2RS1-10-223J	R flake resistor	1005,22K±5%	1	R27
122	2RS1-10-564J	R flake resistor	1005,560K±5%	1	R29
123	2RS1-10-101J	R flake resistor	1005,100Ω±5%	1	R36
124	2RS1-10-821J	R flake resistor	1005,820Ω±5%	1	R37
125	2RS1-10-474J	R flake resistor	1005,470K±5%	1	R605
126	2CC1-10-X7R100-105K	R flake ulti-layer capacitor	1005,1μF±10%,10V,X7R	4	C38,C52,C54,C55
127	2RS1-10-471J	R flake resistor	1005,470Ω±5%	4	R612,R615,R622,R548
128	2RS1-10-562J	R flake resistor	1005,5.6K±5%	1	R613
129	2RS1-10-182J	R flake resistor	1005,1.8K±5%	1	R618

130	2RS1-10-393J	R flake resistor	1005,39K±5%	1	R631
131	2CC1-16-C0G500-180J	R flake ulti-layer capacitor	1608,18P±5%,50V,C0G	1	C502
132	2RS1-16-560J	R flake resistor	1608,56Ω±5%	1	L513
133	2CC1-10-X7R500-472K	flake multi-layer capacitor	1005,4700P±10%,50V	1	C527
134	2CC1-10-X7R160-681K	R flake ulti-layer capacitor	1005,680P±10%,16V,X7R	1	C25
135	2RE1-10-5602	SMD precise resistor	1005,56K±1%	1	R104
136	2RS1-10-155J	flake resistor	1005,1.5M±5%	1	C109

List 2 DP405－01 Motherboard Material List

No.	Part No.	Part Name	Description	Quantity	Position
1	6PM7-4240-HMA	DP405-01 PCB	DP405-01_MAINBOARD_161219	1	
2	2RS1-10-000O	R flake resistor	1005,0Ω	31	C60,C28,R45,C32,R109,R167,R11,R251,R252,C569,C570,C577,R17,R516,R555,R32,C19,R624,R41,R26,R48,R43,R71,R72,R15,C44,C45,C73,C74,R1,C560

3	2CC1-10-X7R160-104K	R flake multi-layer capacitor	1005,100nF±10%,16V,X7R	18	C27,C100,C101,C111,C114,C117,C13,C18,C346,C22,C33,C43,C601,C608,C616,C15,C16,C56
4	2CC1-10-X7R500-471K	R flake multi-layer capacitor	1005,470P±10%,50V,X7R	38	C102,C104,C107,C113,C118,C122,C14,C230,C231,C232,C233,C332,C522,C523,C528,C530,C531,C532,C533,C535,C537,C538,C541,C549,C550,C551,C552,C553,C554,C559,C564,C565,C567,C568,C21,C333,R25,C624
5	2CC1-10-C0G500-221J	R flake multi-layer capacitor	1005,220P±5%,50V,	2	C604,C609
6	2CC1-20-Y5V160-106Z	flake multi-layer capacitor	2012,10uF,16V,Y5V	10	C123,C108,C103,C106,C119,C20,C39,C582,C615,C602
7	2CT1-TP20-100-100M	R SMD tantalum capacitor	2012,10μF±20%,10V,TP	2	C116,C121
8	2CC1-10-X7R500-332K	R flake multi-layer capacitor	1005,3300P±10%,50V	1	C26
9	2CC1-10-X7R500-103K	R flake multi-layer capacitor	1005,10nF±10%,50V,X7R	12	C221,C222,C49,C110,C112,C115,C12,C17,C529,C539,C540,C600
10	2CC1-10-X7R500-153K	R flake multi-layer capacitor	1005,15nF±10%,50V,X7R	1	C547

11	2CC1-10-X7R500-102K	R flake multi-layer capacitor	1005,1000P±10%,50V,X7R	9	C120,C124,C536,C562,C563,C581,R20,C526,C42
12	2CC1-10-X7R500-273K	R flake multi-layer capacitor	1005,27nF±10%,50V,X7R	1	C545
13	1DR1-NSR1020MW2T1G	SMD schottky diode	NSR1020MW2T1G, lead-free	1	D101
14	7MDC-4057-02A-G	Battery pin	lead-free, brass	4	DC
15	3FW1-42932-302320	R SMD fuse	(SC)429003/433003/466003,3216,3A/32V	1	F100
16	1IL1-TDA8547TS	E general linear IC	Audio power amplifier,TDA8547TS	1	U3
17	1IS1-XC6204B502MR	R SMD voltage regulator IC	5V,SOT-23-5	1	IC100
18	1IS1-MP2359	SMD switch power IC	MP2359,6PIN,1.2A 24V,1.4MHz,TSOT-23-6	1	IC102
19	2RS1-16-000O	R flake resistor	1608,0Ω	9	L30,L100,L102,L104,L105,L8,L33,R519,R9
20	2LW1-35UF-472KB	SMD wire wound inductor	3.5*3.0*2.1,4.7UH±20％,PIO32-4R7MT lead-free	1	L107
21	1TT1-KTA1298-Y	R SMD triode	KTA1298-Y,SOT23	2	Q100,Q102

22	1TF1-SSM3K15AFS	R SMD field effect tube	SSM3K15AFS（D1）	1	Q6
23	1TT1-DTC144EE	R SMD triode	Digital tride DTC144EE(26),SOT323	9	Q101,Q103,Q200,Q201,Q601,Q604,Q606,Q4,Q707
24	2RS1-10-103J	R flake resistor	1005,10K±5%	17	R240,R241,R242,R243,R100,R103,R110,R13,R245,R28,R30,R614,R617,R46,R68,R70,R57
25	2RS1-10-222J	R flake resistor	1005,2.2K±5%	4	R101,R102,R246,R247
26	2RS1-10-274J	R flake resistor	1005,270K±5%	1	R105
27	2RE1-10-1602	SMD precise resistor	1005,16.2K±1%	1	R106
28	2RS1-10-104J	R flake resistor	1005,100K±5%	5	R107,R549,R526,R63,R51
29	2RS1-10-102J	R flake resistor	1005,1K±5%	17	R108,R236,R237,R238,R239,R502,R539,R544,R545,R547,R551,R560,R623,R10,R6,R3,R60
30	2CC1-10-X7R160-333K	R flake multi-layer capacitor	1005,33nF±10%,16V,X7R	3	C47,R12,C583
31	2CC1-10-C0G500-820J	R flake multi-layer capacitor	1005,82P±5%,50V,C0G	3	C511,C512,C558
32	2CC1-10-C0G500-1R0C	R flake multi-layer capacitor	1005,1P±0.25P,50V,C0G	1	C61

33	2CC1-16-C0G500-7R0C	flake multi-layer capacitor	1608,7P±0.25P,50V,C0G	1	C83
34	2CC1-16-C0G500-110J	R flake multi-layer capacitor	1608,11P±5%,50V,C0G	1	C504
35	2CC1-16-C0G500-9R0C	R flake multi-layer capacitor	1608,9P±0.25P,50V,C0G	1	C503
36	2CC1-10-C0G500-360J	R flake multi-layer capacitor	1005,36P±5%,50V,C0G	1	C518
37	2CC1-10-C0G500-120J	R flake multi-layer capacitor	1005,12P±5%,50V,C0G	1	C520
38	2LW1-16UC-470J	R SMD wire wound inductor	1608,47nH±5%, ceramic core (C1608CB-47NJ)	2	L3,L4
39	2CC1-10-C0G500-151J	R flake multi-layer capacitor	1005,150P±5%,50V,C0G	2	C573,C610
40	2CC1-10-C0G500-150J	R flake multi-layer capacitor	1005,15P±5%,50V,C0G	2	R504,C519
41	6SS2-4169-HL1A	LT1901module set	LT1901module	1	IC1

42	1IM1-LTS1901A-DP405	Liantuo encrypted IC	Encrypted chip, LTS1901A-DP405, lead-free	1	U2
43	1IS1-MCP4802-A	D/A switch IC	MCP4802	1	U20
44	2CC1-10-C0G500-101J	R flake multi-layer capacitor	1005,100P±5%,50V,C0G	2	C24,C48
45	1DR1-ESD9B5	TVS diode	ESD9B5.0ST5G,5V，SOD923, lead-free	2	D18,D19
46	2CC1-10-C0G500-560J	R flake multi-layer capacitor	1005,56P±5%,50V,C0G	1	C543
47	2RS1-20-000O	R flake resistor	2012,0Ω	1	C337
48	4PE1-16-F2	SMD LED	1608, red light	1	D203
49	4PE1-16-F5	SMD LED	1608, green light	1	D205
50	1IM1-AT24C512C	SMD memorizer IC	AT24C512C	1	IC200
51	1IL1-NJM2904V	SMD linear IC	NJM2904V,TSSOP-8	3	IC301,IC500,IC302
52	5FE1-BLM11A601S	EMI suppression filter	1608,BLM11A601S/	7	L517,L515,L521,L32,L600,L300,L29
53	2RS1-10-220J	R flake resistor	1005,22Ω±5%	3	R511,R604,R73

54	2RS1-10-473J	R flake resistor	1005,47K±5%	11	R4,R227,R501,R508,R513,R540,R541,R557,R558,R61,R62
55	2RS1-10-683J	R flake resistor	1005,68K±5%	1	R21
56	2RS1-10-822J	R flake resistor	1005,8.2K±5%	1	R22
57	2RS1-10-153J	R flake resistor	1005,15K±5%	4	R23,R512,R542,R53
58	2RS1-10-100J	R flake resistor	1005,10Ω±5%	3	R244,R559,R66
59	2RS1-10-221J	R flake resistor	1005,220Ω±5%	2	R249,R250
60	2RS1-10-204J	R flake resistor	1005,200K±5%	2	R340,R52
61	2CC1-16-C0G500-300J	R flake multi-layer capacitor	1608,30P±5%,50V,C0G	2	C87,C88
62	2CC1-16-C0G500-160J	R flake multi-layer capacitor	1608,16P±5%,50V,C0G	1	C514
63	2CC1-10-C0G500-390J	R flake multi-layer capacitor	1005,39P±5%,50V,C0G	1	C521
64	2CC1-16-C0G500-180J	R flake multi-layer capacitor	1608,18P±5%,50V,C0G	1	C516
65	2CC1-16-C0G500-220J	R flake multi-layer	1608,22P±5%,50V,C0G	1	C515

		capacitor			
66	2CC1-16-C0G500-120J	R flake multi-layer capacitor	1608,12P±5%,50V,C0G	2	C90,C534
67	2CC1-16-C0G500-680J	R flake multi-layer capacitor	1608,68P±5%,50V,C0G	1	C89
68	2CC1-16-C0G500-8R0C	R flake multi-layer capacitor	1608,8P±0.25P,50V,C0G	1	C513
69	2CC1-10-C0G500-6R0C	R flake multi-layer capacitor	1005,6P±0.25P,50V,C0G	1	C561
70	2CC1-20-X7R6R3-475K	R flake multi-layer capacitor	2012,4.7uF±10%,6.3V	3	C50,C51,C617
71	2CC1-10-X7R500-271K	R flake multi-layer capacitor	1005,270P±10%,50V,X7R	1	C36
72	2RS1-10-561J	R flake resistor	1005,560Ω±5%	1	C578
73	2CC1-10-X7R250-223K	R flake multi-layer capacitor	1005,22nF±10%,25V,X7R	1	C584
74	1DS1-1SS390	SMD switch tube	1SS390,1608	4	D500,D501,D502,D503

75	2CC1-16-X7R500-471K	R flake multi-layer capacitor	1608,470P±10%,50V,X7R	1	L6
76	2LH1-R401R5-R03-05	R SMD air core inductor	wire φ0.40, internal diameter φ1.5, pin height 0.5mm	2	L44,L45
77	2LH1-R301R5-L05-05	R SMD air core inductor	wireφ0.30 internal diameterφ1.5 high pin	2	L46,L503
78	2LH1-R301R5-R07-05	SMD air core inductor	wireφ0.30 internal diameterφ1.5, high pin	1	L505
79	2LH1-R301R5-L06-05	R SMD air core inductor	wire φ0.30 internal diameterφ1.5 , high pin	2	L501,L502
80	2LL1-16-R10K	R Multilayer inductor	1608,0.1μH±10%	2	L509,L511
81	2LL1-16-27NJ	R Multilayer inductor	1608,27nH±5%	1	L510
82	2LL1-16-2N7S	Multilayer inductor	1608,2.7nH±2%	1	L504
83	2LW1-25UC-102JA	R SMD wire wound inductor	2520,1μH±5%, ceramic core (FHW1008UC1R0J)	1	L506
84	2LH1-R401R5-R08-05	R SMD air core inductor	(SC)wire φ0.40,internal diamter φ1.5, high pin	1	L507
85	2LW1-20UC-221J	R SMD wire	2012,220nH±5%,ceramic	1	L508

		wound inductor	core		
86	5FE1-BLM21P300S	R SMD EMI suppression filter	2012,BLM21P300S/BLM21PG300S(0149-05)	2	L512,L514
87	2CC1-20-X7R500-471K	flake multi-layer capacitor	2012,470P±10%,50V,X7R	1	L520
88	1TF1-RD07MUS2B	SMD field effect tube	RD07MUS2B，internal diameter	1	Q500
89	1TF1-RD01MUS2	SMD field effect tube	RD01MUS2	1	Q501
90	1TT1-2SC5108-Y	R SMD triode	2SC5108-Y(MC),NPN	1	Q502
91	1TT1-2SC3356-R24	R SMD triode	2SC3356-R24,SOT23	1	Q503
92	2RS1-10-392J	R flake resistor	1005,3.9K±5%	2	R24,R632
93	2RS1-10-472J	R flake resistor	1005,4.7K±5%	4	R39,R561,R562,R35
94	2RS1-10-470J	R flake resistor	1005,47Ω±5%	1	R500
95	2RS1-10-682J	R flake resistor	1005,6.8K±5%	1	R503
96	2RS1-10-271J	R flake resistor	1005,270Ω±5%	1	R505
97	2RS1-10-152J	R flake resistor	1005,1.5K±5%	1	R507
98	2RS1-10-563J	R flake resistor	1005,56K±5%	2	R509,R38

99	2RS1-10-203J	R flake resistor	1005,20K±5%	2	R529,C4
100	2RS1-10-330J	R flake resistor	1005,33Ω±5%	1	R510
101	2RS1-16-271J	R flake resistor	1608,270Ω±5%	1	R515
102	2RS1-16-333J	R flake resistor	1608,33K±5%	1	R8
103	2RS1-16-224J	R flake resistor	1608,220K±5%	1	R42
104	2RE1-16-1003	SMD precise resistor	1608,100K±1%	2	R527,R528
105	2RE1-16-1503	R SMD precise resistor	1608,150K±1%	2	R518,R525
106	2RS1-16-225J	flake resistor	1608,2.2M±5%	1	R517
107	2RS1-32-R39J	R flake resistor	3216,0.39Ω±5%	4	R520,R521,R522,R523
108	2RS1-10-154J	R flake resistor	1005,150K±5%	2	R550,R44
109	2RS1-10-184J	R flake resistor	1005,180K±5%	1	R553
110	1TC1-UMC4	R SMD composite tube	UMC4,NPN/PNP composite tube	1	U301
111	1IS1-AT1846S	SMD specialized IC	AT1846S, lead-free	1	U500
112	5OT1-12R8-CEC3-0503	R SMD temperature	12.8MHz±2.5PPm,5.0*3.2*1.6mm	1	X500

		compensated crystal oscillator			
113	2CC1-10-X7R160-683K	R flake multi-layer capacitor	1005,68nF±10%,16V,X7R	1	C23
114	2CC1-10-X7R160-473K	R flake multi-layer capacitor	1005,47nF±10%,16V,X7R	1	C40
115	2CC1-10-X7R500-182K	R flake multi-layer capacitor	1005,1800P±10%,50V,X7R	1	C31
116	2CC1-10-C0G500-100D	R flake multi-layer capacitor	1005,10P±0.5P,50V,C0G	1	C35
117	2RS1-10-333J	R flake resistor	1005,33K±5%	3	R18,R31,R616
118	1DS1-1SS372	SMD switch diode	Double diode	1	D4
119	1TT1-2SC4116-GR	R SMD triode	2SC4116-GR	1	Q2
120	1TF1-ST3400SRG	SMD field effect tube	ST3400SRG,SOT-23，STANSON	2	Q602,Q603
121	1TT1-2SA1586	R SMD triode	2SA1586	1	Q605
122	2RS1-10-223J	R flake resistor	1005,22K±5%	1	R27

123	2RS1-10-564J	R flake resistor	1005,560K±5%	1	R29
124	2RS1-10-101J	R flake resistor	1005,100Ω±5%	1	R36
125	2RS1-10-821J	R flake resistor	1005,820Ω±5%	1	R37
126	2RS1-10-474J	R flake resistor	1005,470K±5%	1	R605
127	2CC1-10-X7R100-105K	R flake multi-layer capacitor	1005,1μF±10%,10V,X7R	4	C38,C52,C54,C55
128	2RS1-10-471J	R flake resistor	1005,470Ω±5%	5	R612,R615,R622,R548,R14
129	2RS1-10-562J	R flake resistor	1005,5.6K±5%	1	R613
130	2RS1-10-182J	R flake resistor	1005,1.8K±5%	1	R618
131	2RS1-10-393J	R flake resistor	1005,39K±5%	1	R631
132	2RS1-16-560J	R flake resistor	1608,56Ω±5%	1	L513
133	2CC1-10-X7R500-472K	flake multi-layer capacitor	1005,4700P±10%,50V	1	C527
134	2CC1-10-X7R160-681K	R flake multi-layer capacitor	1005,680P±10%,16V,X7R	1	C25
135	2RE1-10-5602	SMD precise resistor	1005,56K±1%	1	R104
136	2RS1-10-155J	flake resistor	1005,1.5M±5%	1	C109

137	2CC1-16-C0G500-5R0C	R flake multi-layer capacitor	1608,5P±0.25P,50V,C0G	1	C505
138	4SM7-6027-A40B	mic	Φ6.0mm-40dB±2dB,2.2KΩ	1	
139	3CE3-CZ25-D	2.5mm earphone jack	PJ-208B	1	
140	3CE3-CZ35-F	3.5mm earphone jack	4pins , with switch	1	
141	2RW3-RP08110SNJX-V01	Volume switch	RP08110SNJX-V01-0001, lead-free	1	
142	3SE3-RE08220HX-V02	Channel switch	4.75mm shaft	1	

List 3 Module List

No.	Part No.	Part Name	Description	Quantity	Position
1	2CC1-10-X7R500-102K	R flake ulti-layer capacitor	1005,1000P±10%,50V,X7R	4	C2,C85,C109,C10
2	2CC1-10-Y5V160-105Z	flake multi-layer capacitor	1005,1uF+80%/-20%,16V,Y5V	14	C11,C3,C86,C106,C225,C9,C25,C29,C44,C51,C58,C155,C103,C340

3	2CC1-10-X7R160-104K	R flake ulti-layer capacitor	1005,100nF±10%,16V,X7R	18	C215,C216,C220,C221,C222,C441,C94,C95,C105,C336,C341,C1,C4,C5,C6,C204,C205,C469
4	5FE1-CB100505-102	SMD EMI suppression filter	1005,1KΩ	5	R6,R46,R85,R98,R143
5	1IS1-LT1901A-MCU	MCU+base band processor IC	LT1901A	1	U21
6	2CC1-20-Y5V160-106Z	flake multilayer capacitor	2012,10uF,16V,Y5V	4	C7,C8,C98,C148
7	2CC1-10-X7R500-103K	R flake multilayer capacitor	1005,10nF±10%,50V	1	C38
8	2CC1-10-C0G500-220J	R flake multi-layer capacitor	1005,22P±5%,50V,C0G	2	C313,C314
9	2LW1-35UF-472KB	SMD wire wound inductor	3.5*3.0*2.1,4.7UH±20％,	2	L1,L2
10	2LL1-16-1R0K	R Multilayer inductor	1608,1μH±10%	1	L25
11	2RS1-10-000O	R flake resistor	1005,0Ω	14	R3,R7,R150,R559,B1,B3,B4,B5,R1,R2,R5,R12,R15,R16
12	2RS1-10-102J	R flake resistor	1005,1K±5%	2	R4,R83
13	2RS1-10-304J	R flake resistor	1005,300K±5%	1	R20
14	2RS1-10-103J	R flake resistor	1005,10K±5%	10	R23,R24,R25,R27,R50,R74,R75,R76,R81,R14

15	5XT1-MC146-32R76K	SMD ceramic harmonic oscillator	32.768KHZ,MC-146,12.5PF,20PPM lead-free	1	X301
16	5OT1-26R0-HHL-0303	SMD temperature compensated crystal oscillator	26MHz±2ppm,-30 ℃ +85 ℃,2.8V,3	1	Y3
17	2RS1-10-822J	R flake resistor	1005,8.2K±5%	1	R71
18	2RS1-10-330J	R flake resistor	1005,33Ω±5%	1	R68
19	6PD7-4038-HL1E	Module plate	LT1901+MODULE_20160516,	1	LT1901PCB
20	1IP1-0DP405-R01	DP405programmed chip	FLASH IC, lead-free	1	U15
21	2RS1-10-473J	R flake resistor	1005,47K±5%	4	R8、R10、R11、R18
22	2RS1-10-273J	R flake resistor	1005,27K±5%	1	R19

Appendix 3 Material List (Structural Section)

No.	Part No.	Part Name	Description	Quantity
1	7MHP-4169-02B-W0	DP405 top cover	PC1414, black, lead-free	1

2	7MHP-4141-04C-W0	S8 volume knob	ABS,black cool gray	1
3	7MHP-7210-03C-W0	PT567 channel knob	ABS,black pantone cool gray 6C	1
4	7MHP-4097-02A-W0	Earphone jack waterproof pad	TPU: black textured, lead-free	1
5	7MHL-4141-01A-N	S8 aluminum shell	lead-free	1
6	7MHR-4038-02A-W0	S760main wanterproof ring	Silica gel, black, high-gloss, lead-free	1
7	7MHR-4038-04A-W0	S760top waterproof pad	Silica gel, black, polished, lead-free	1
8	7MHR-4038-05A-W0	S760 pin jack	Silica gel, black, polished, lead-free	1
9	7MHS-4038-02B-W	S760 PTT key metal dome	lead-free	1
10	7NRC-060090035-W1	S760(DP460) channel nut	brass, internal diameter M6mm, external diameterφ9mm, 3.5mm thick, lead-free	2
11	7SMF-020040M-SZYB-N	R M2*4 cross machine screw (558/PT4200/PT558S/5200/PT(priority)	Φ2mm*4mm	8
12	7SMF-020080M-MHHT-N1	R M2*8 torx machine screw558/E66/PT558/4200/PT4200/5200(priority)	Φ2mm*8mm	2
13	7MHR-7042-06B-W0	R conducted silica gel pad	Silica gel, black, 3*6*9mm, lead-free	1
14	3CR7-SMA-50JF-4	R RF coaxial connetcor	SMA-J, flange plate installation	1

15	7NRC-090110025-W1	Antenna nut, also 7NRC-090110025-W1	Internal diameter M9mm, external diameter φ11mm, 2.5mm thick	1
16	7MHS-1140-01A-W	R 3118/3208 knob circlip	Spring steel	2
17	7SMF-025080M-SZYB-Z1	R M2.5*8 cross machine screw 4208/PT4208/AP570/DP570/S660	Φ2.5mm*8mm	2
18	6PD7-4038-HPC	S760 PTT board	S760-PTT-140102.PCB,FR4,38X9.3MM thick :0.4MM, lead-free	1
19	6SS3-BJ4038-B	KBJ-17 belt clip	S760/DP405 belt clip lead-free	1
20	0SS3-4038-B	KBJ-17 belt clip	ABS, black	1
21	7MJP-4038-01E-W0	KBJ-17 belt clip	ABS; black lead-free	1
22	7MJS-7013-01B-N	R KBJ-09 belt clip bracket	lead-free, stainless steel	1
23	7MJS-7013-02A-W	R KBJ-09 belt clip circlip	φ1.00 lead-free	1
24	7MJS-7154-02A-W0	GD-9 belt clip shaft	SUS304, lead-free	1
25	7MHS-4038-03C-W	S765/785 motherboard shield cover	0.3mm lead-free	1
26	6SS3-MK4169-HMA	DP405 front cover kit	lead-free	1
27	7MHP-4169-01I-W0	DP405 front cover	Textured， lead-free	1
28	7MHP-4097-01A-W0	S565 earphone cover	TPU，black， lead-free	1

29	7MHR-4169-01A-W0	DP405 PTT key	Silica gel, black, lead-free	1
30	7MHR-4169-02A-WC	DP405 guide beam	lead-free, white, silica gel	1
31	7MJS-4038-01A-W0	S760 shaft	lead-free	1
32	7GCB-070001	φ7 mic waterproof cloth	Diamater φ7mm, thickness 0.1mm	1
33	4SS7-4005-016-100C	Speaker 7200,6500，S780，S785，S760，S765,567	Φ40, impedance 16Ω, power 1W, lead-free	1
34	7GCB-360001-W0	R φ36 speaker waterproof net	Diameter φ36mm*thickness 0.1mm(558)	1
35	7GCM-075045005	S8 MIC sponge pad	PORON,THK'S=0.5mm, external diamater Φ7.5 internal diameter Φ4.5, lead-free	1
36	7GCP-350235015-J	S765 speaker wire control plate	PET 35*23.5*0.15mm, lead-free	1
37	7MBM-S4002-A	Conducted foam	12*7*7 lead-free	1
38	7MHR-1727-09A-W3	R 558 mic cover	Silica gel orange	1
39	7MHP-4169-05C-W0	DP405 PTT key	lead-free	1
40	7MHZ-1731-01A-J5	R 3300speaker insulted paper	Length 18mm*width 8mm* thickness 0.2mm,	1

Appendix 4 Accessory List

Accessory	Quantity
Antenna	1
Belt Clip	1
Earphone Cover	1
Screw	1
Battery	1
Charger	1
Power Adaptor	1
User Guide	1
Warranty Card	1
Strap	1


Charger


Battery


Belt Clip


Power adapator


Antenna


Strap

Appendix 5 Schematic Disagram and Postion Mark

Diagram 1 DP405-02 Motherbaord Schematic Diagram (6PM7-4169-HMB)

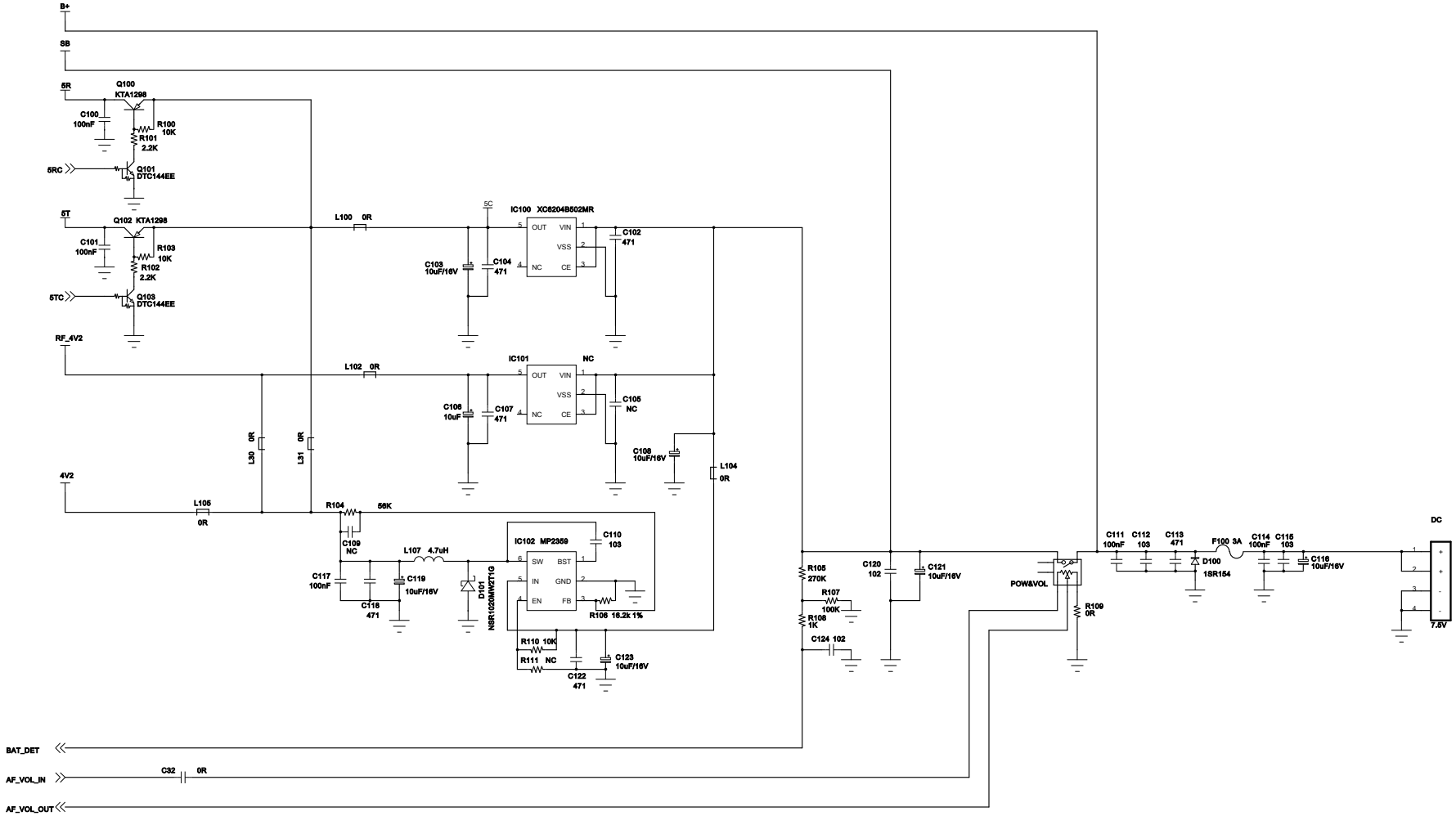

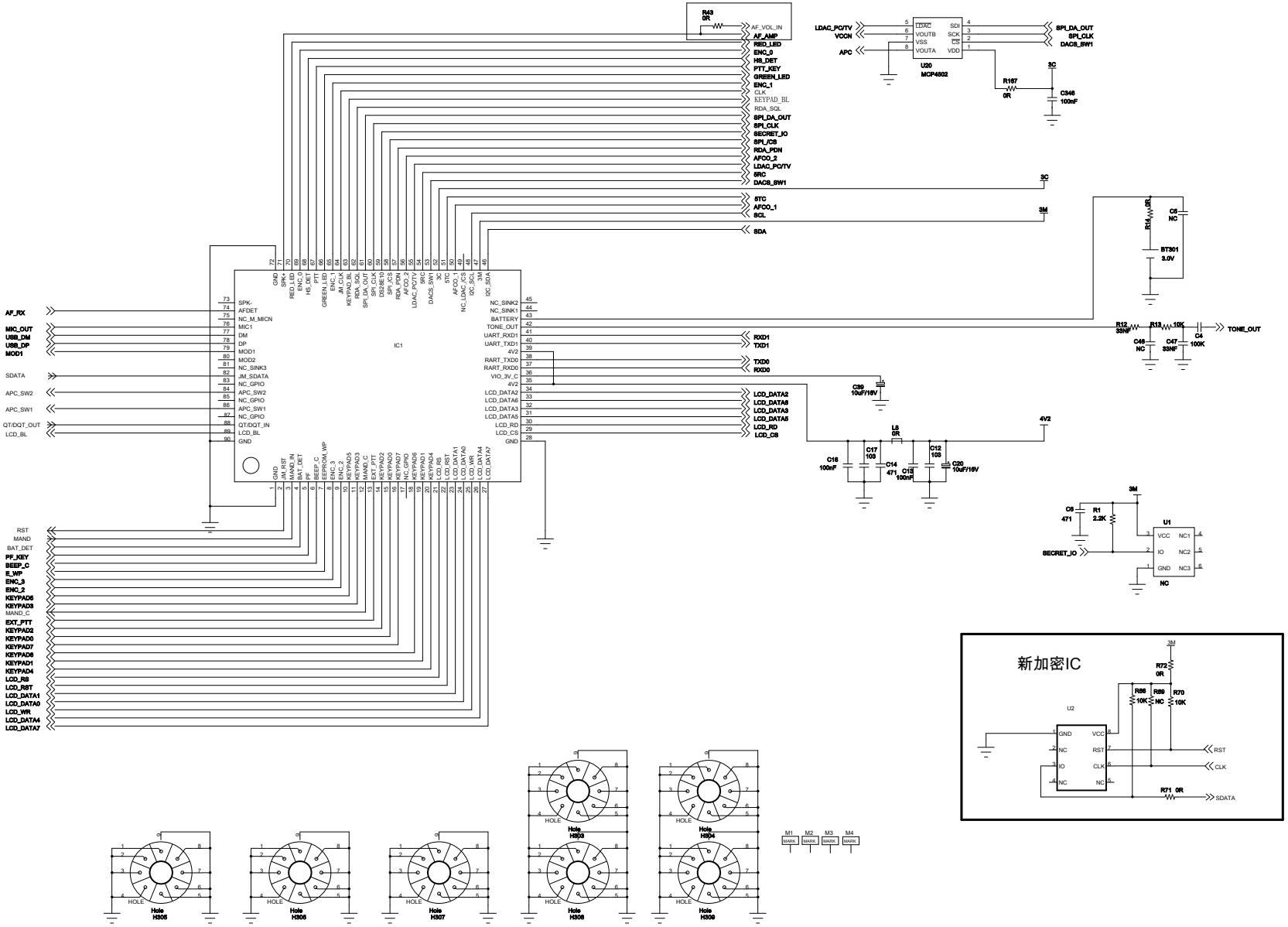
IC1
U20
MCP4802
U1
新加密IC
U2
R43
0R
R167
0R
C346
100nF
R14
0R
C5
NC
BT301
3.0V
R12
33NF
R13
10K
C4
100K
C46
NC
C47
33NF
TONE_OUT
C39
10uF/16V
L8
0R
C16
100nF
C17
103
C14
471
C13
100nF
C12
103
C26
10uF/16V
C8
471
R1
2.2K
R72
0R
R68
10K
R69
NC
R70
10K
R71 0R
Hole
H303
Hole
H304
Hole
H305
Hole
H306
Hole
H307
Hole
H308
Hole
H309
M1
M2
M3
M4

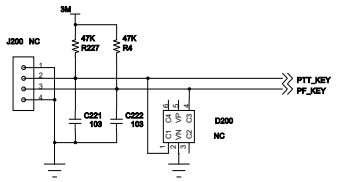
J200 NC
3M
47K R227
47K R4
PTT_KEY
PF_KEY
C221 103
C222 103
D200 NC

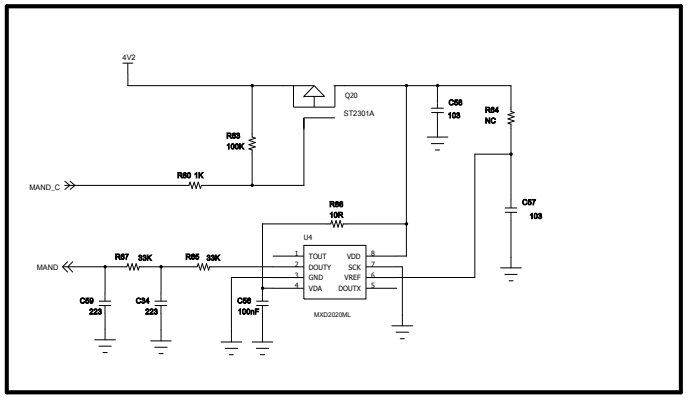
4V2
Q20 ST2301A
C66 103
R54 NC
R53 100K
MAND_C
R50 1K
R56 10R
C67 103
U4
MAND
R57 33K
R55 33K
C59 223
C34 223
C58 100nF
MXD2020ML

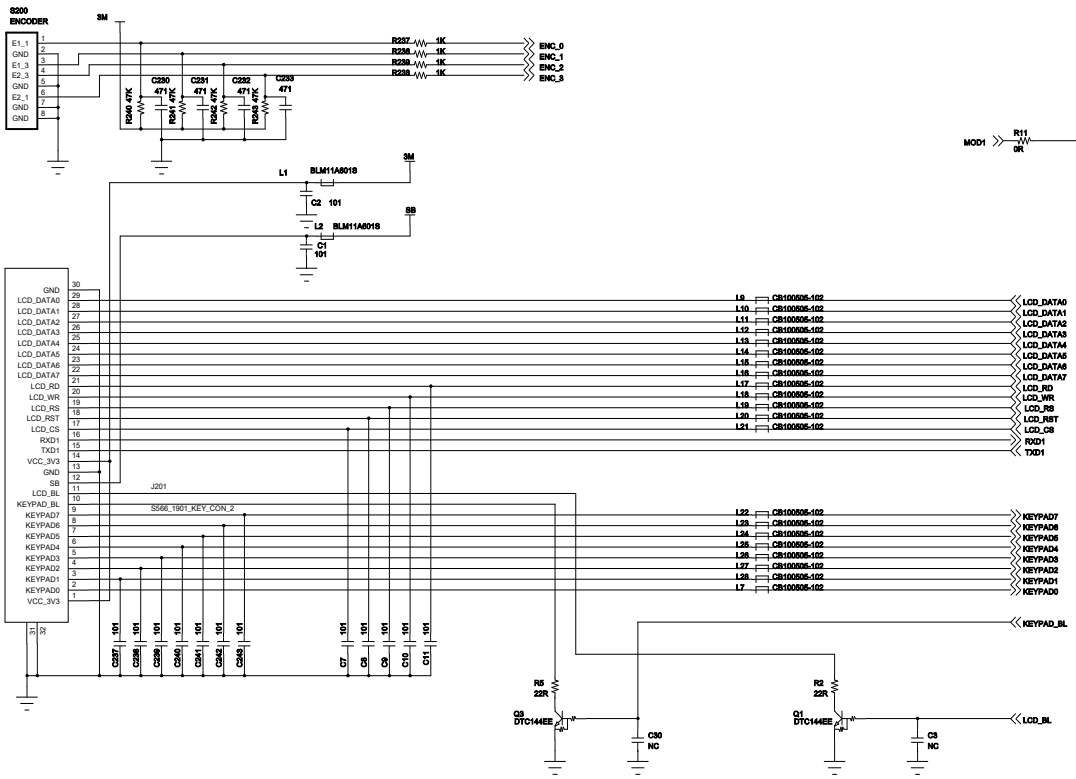
S200 ENCODER
3M
R237 1K
R238 1K
R239 1K
R238 1K
ENC_0
ENC_1
ENC_2
ENC_3
C230 471
C231 471
C232 471
C233 471
R240 47K
R241 47K
R242 47K
R243 47K
L1 BLM11A601S
C2 101
L2 BLM11A601S
C1 101
SB
J201
SS66_1901_KEY_CON_2
GND
LCD_DATA0
LCD_DATA1
LCD_DATA2
LCD_DATA3
LCD_DATA4
LCD_DATA5
LCD_DATA6
LCD_DATA7
LCD_RD
LCD_WR
LCD_RS
LCD_RST
LCD_CS
RXD1
TXD1
VCC_3V3
SB
LCD_BL
KEYPAD_BL
KEYPAD7
KEYPAD6
KEYPAD5
KEYPAD4
KEYPAD3
KEYPAD2
KEYPAD1
KEYPAD0
VCC_3V3
CB100505-102
C237 101
C238 101
C239 101
C240 101
C241 101
C242 101
C243 101
C7 101
C8 101
C9 101
C10 101
C11 101
R5 22R
Q3 DTC144EE
C30 NC
R3 22R
Q1 DTC144EE
C3 NC
LCD_BL

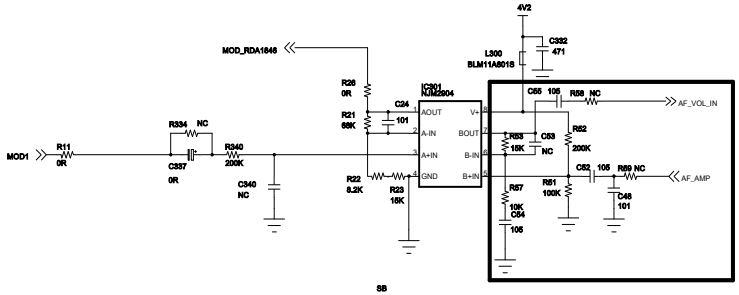
MOD_RDA1846
4V2
C332 471
L300 BLM11A601S
R26 0R
IC201 NJM2904
C24 101
R21 68K
R334 NC
C337 0R
R340 200K
MOD1
R11 0R
C340 NC
R22 8.2K
R23 15K
AOUT
A-IN
A+IN
GND
V+
BOUT
B-IN
B+IN
C65 105
R58 NC
AF_VOL_IN
R53 15K
C53 NC
R52 200K
C62 105
R59 NC
AF_AMP
R51 100K
C48 101
R57 10K
C54 105

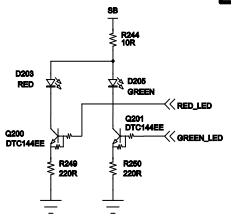
SB
R244 10R
D203 RED
D205 GREEN
RED_LED
GREEN_LED
Q200 DTC144EE
Q201 DTC144EE
R249 220R
R250 220R

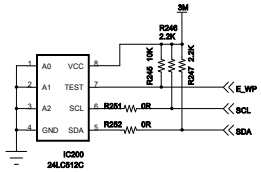
3M
R246 2.2K
R245 10K
R247 2.2K
A0
A1
A2
GND
VCC
TEST
SCL
SDA
E_WP
R251 0R
SCL
R252 0R
SDA
IC200 24LC512C

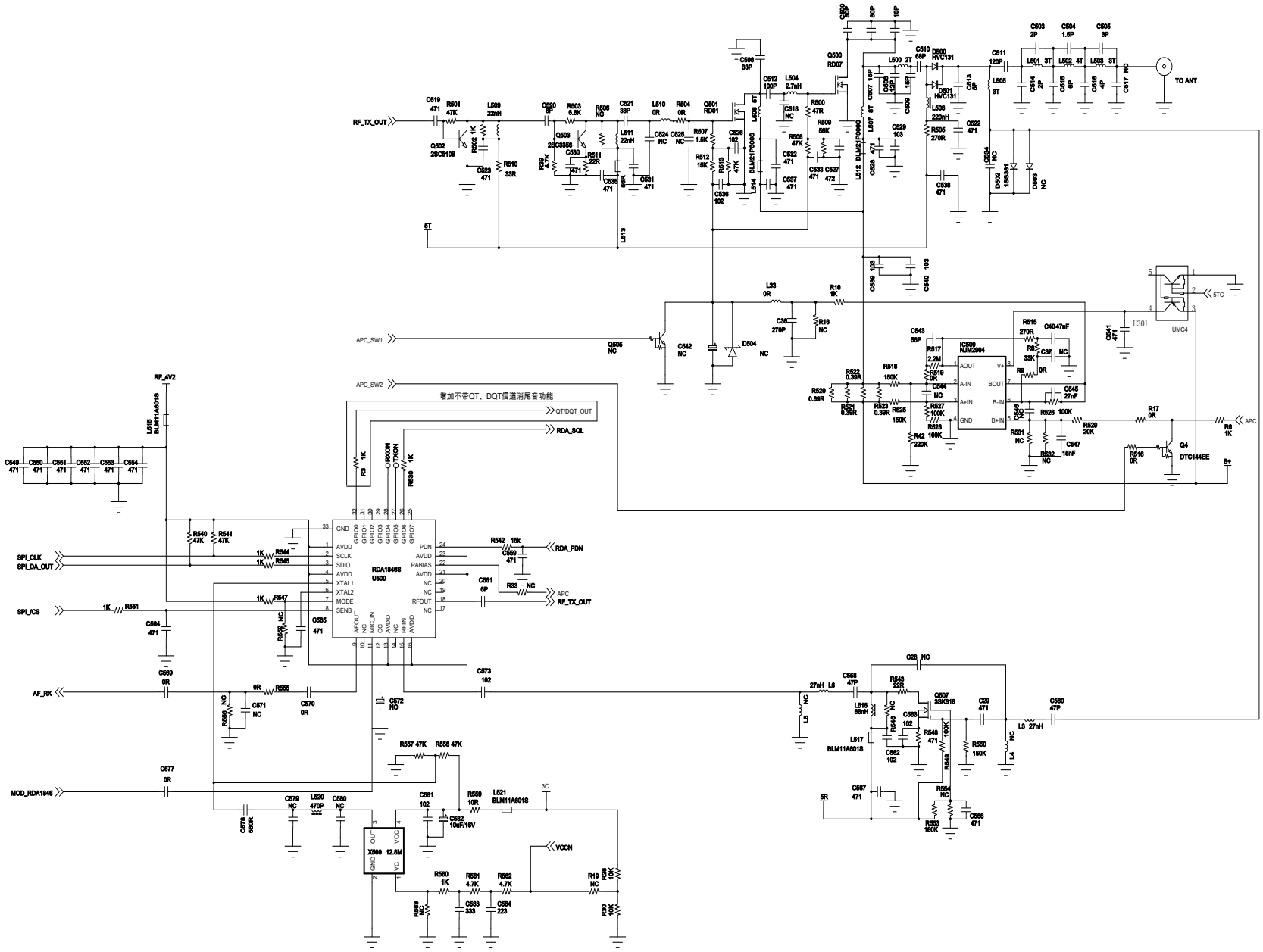
RF_TX_OUT
TO ANT
APC_SW1
APC_SW2
增加不带QT、DQT低道消尾音功能
QT/DQT_OUT
RDA_SQL
RDA_PDN
SPI_CLK
SPI_DA_OUT
SPI_CS
AF_RX
MOD_RDA1846
RF_4V2
APC
B+
5TC
UMC4
RDA1846B
U500
X500 12.6M
VCCN

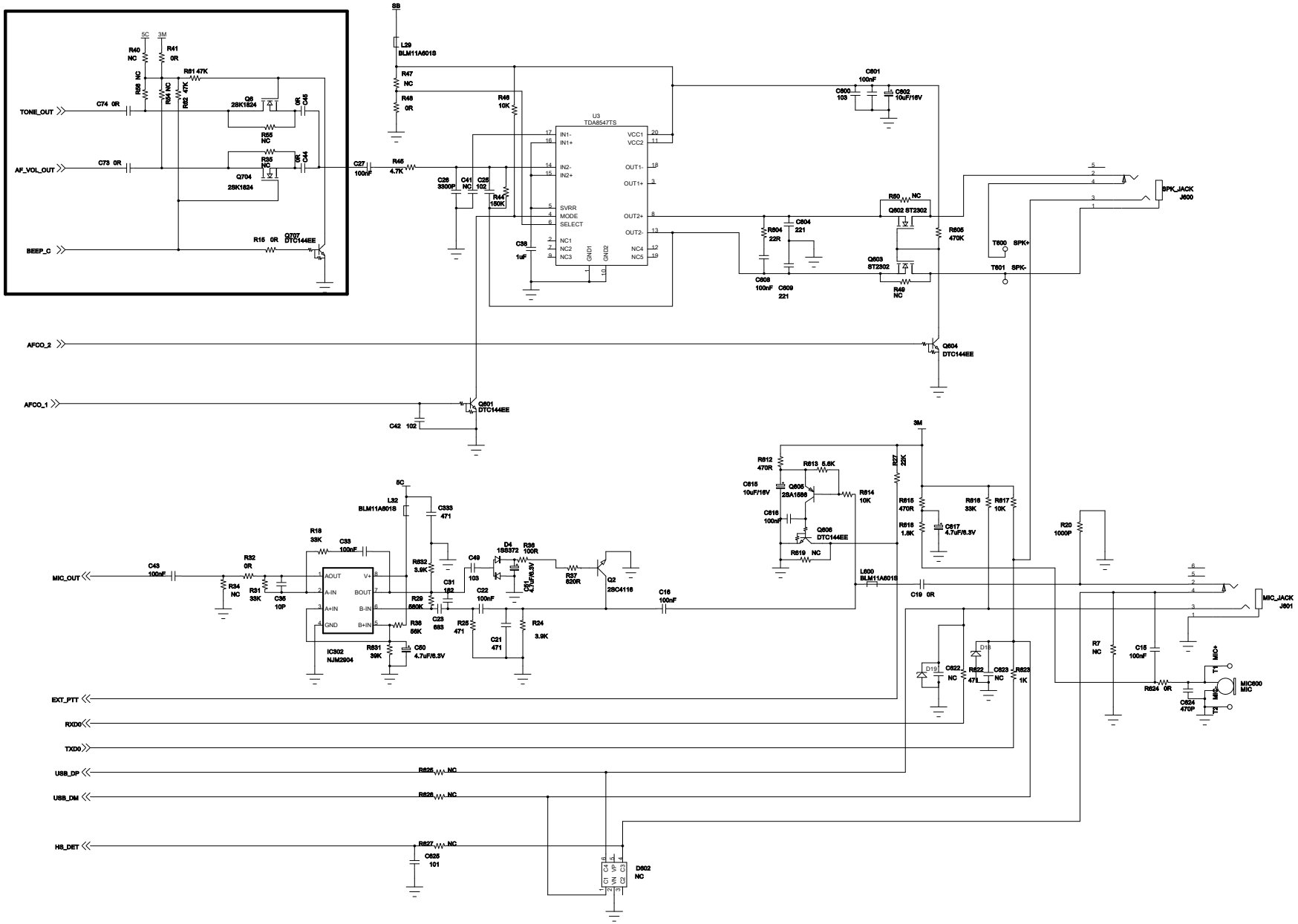
TONE_OUT
AF_VOI_OUT
BEEP_C
AFCO_2
AFCO_1
MIC_OUT
EXT_PTT
RXD0
TXD0
USB_DP
USB_DM
HS_DET
U3
TDA8547TS
IC302
NJM2904
SPK_JACK
J600
MIC_JACK
J601
MIC600
MIC
D602
NC

Diagram 2 DP405-02 Motherboard Position Mark (6PM7-4169-HMB)

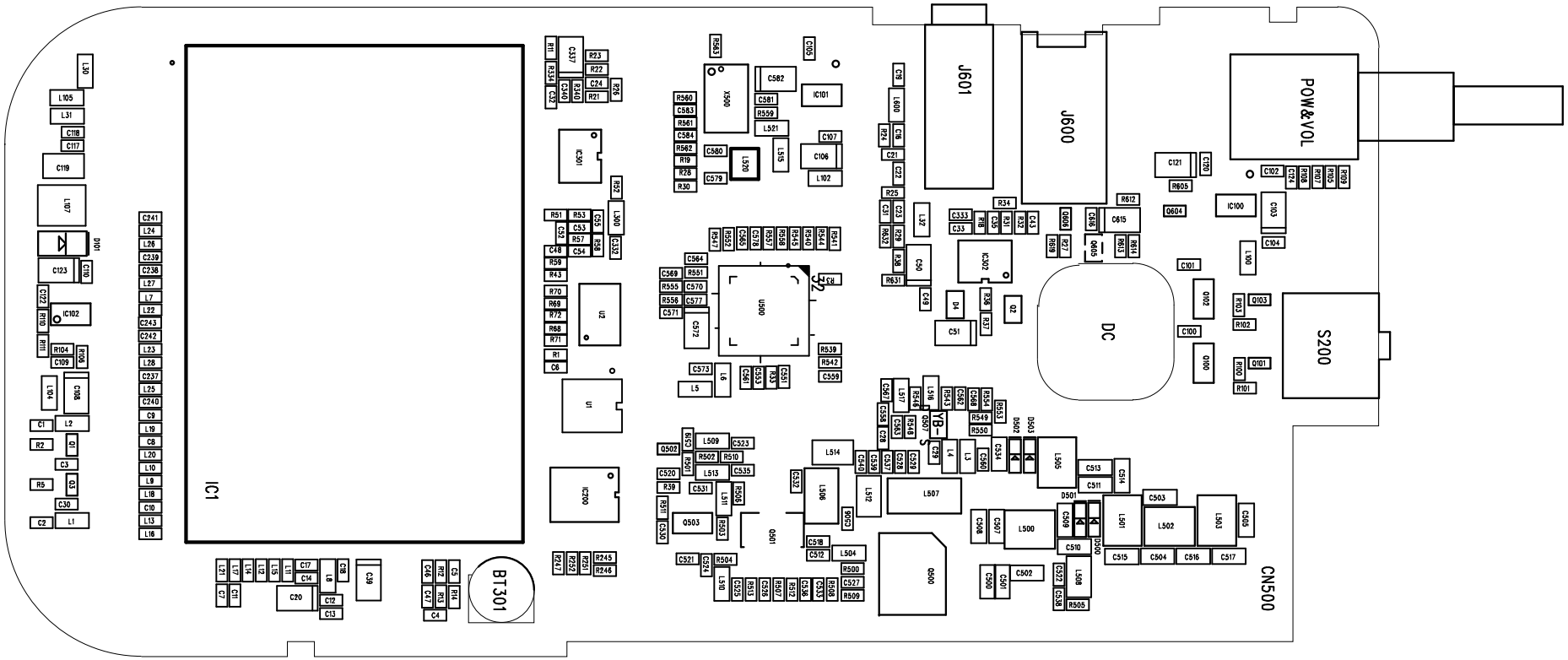

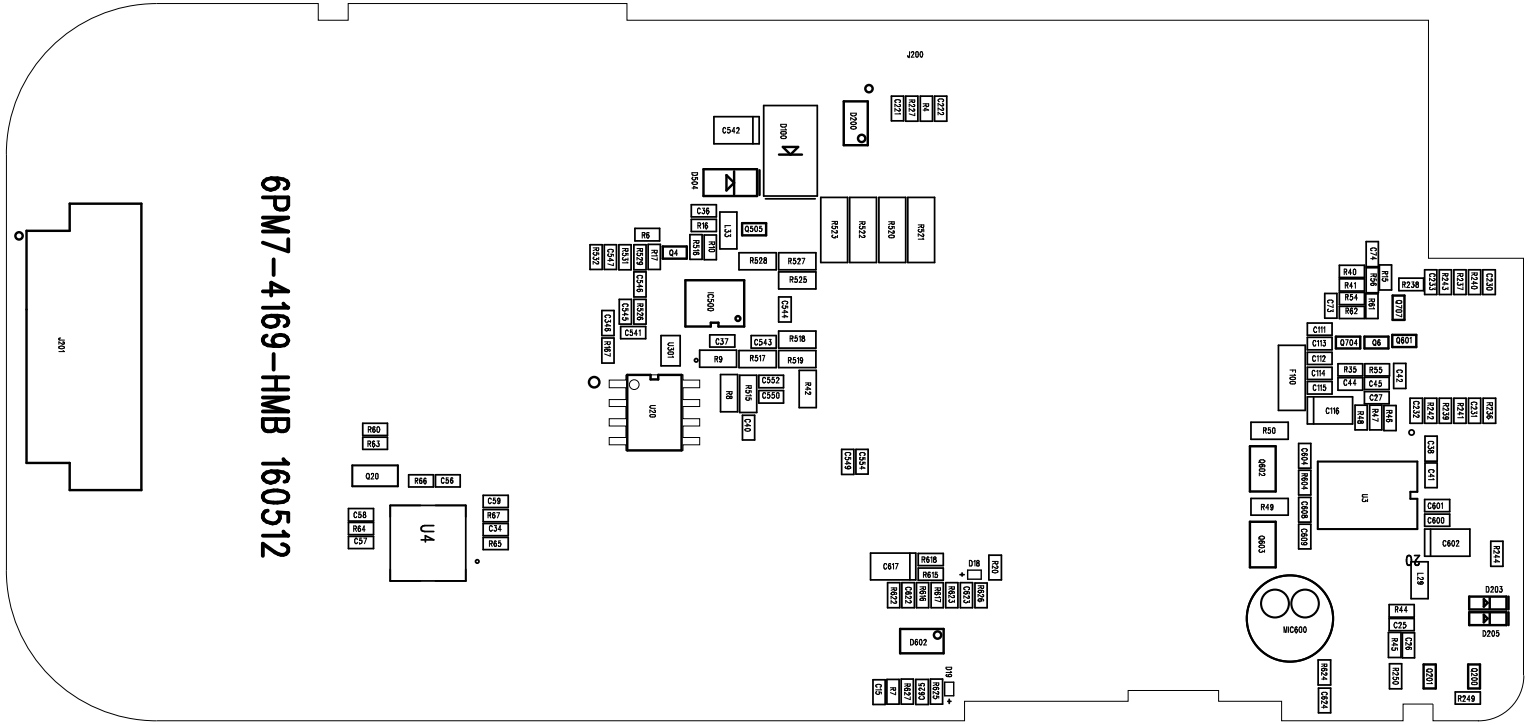
6PM7-4169-HMB 160512
J200
J201
D200
D203
D205
D300
D304
D602
D603
D604
C542
C222
C221
R4
R227
R223
R222
R220
R221
C36
R16
L31
Q505
R6
R8
R36
R7
Q4
R528
R527
R525
R532
C547
R533
C546
R526
C545
C549
R87
C541
IC500
C244
U301
C37
C543
R518
R9
R517
R519
R8
R516
C552
C550
R42
C40
Q20
C549
C554
C617
R618
R615
R20
BU
R616
R614
R613
R612
R611
R610
R609
R608
R607
R606
R605
R604
R603
R602
C603
C602
C604
R4
R605
R40
R41
R54
R62
C43
R238
C233
R237
R240
C230
Q703
C111
C113
Q704
Q6
Q601
C112
C114
C115
F600
R35
R55
C44
C45
C43
C116
C27
R48
R46
R47
C232
R242
R239
R241
C231
R236
R50
Q602
R49
Q603
C604
R604
C606
C605
C38
C41
U3
C601
C600
C602
R243
L29
D203
D205
MIC600
R44
C25
R45
C26
R250
Q201
Q200
R249
R602
C602
U4
Q20
R60
R63
R66
C56
C58
R64
C57
C59
R67
C34
R65

Diagram 3 DP405-01 Motherbaord Schematic Diagram (6PM7-4169-HMB)

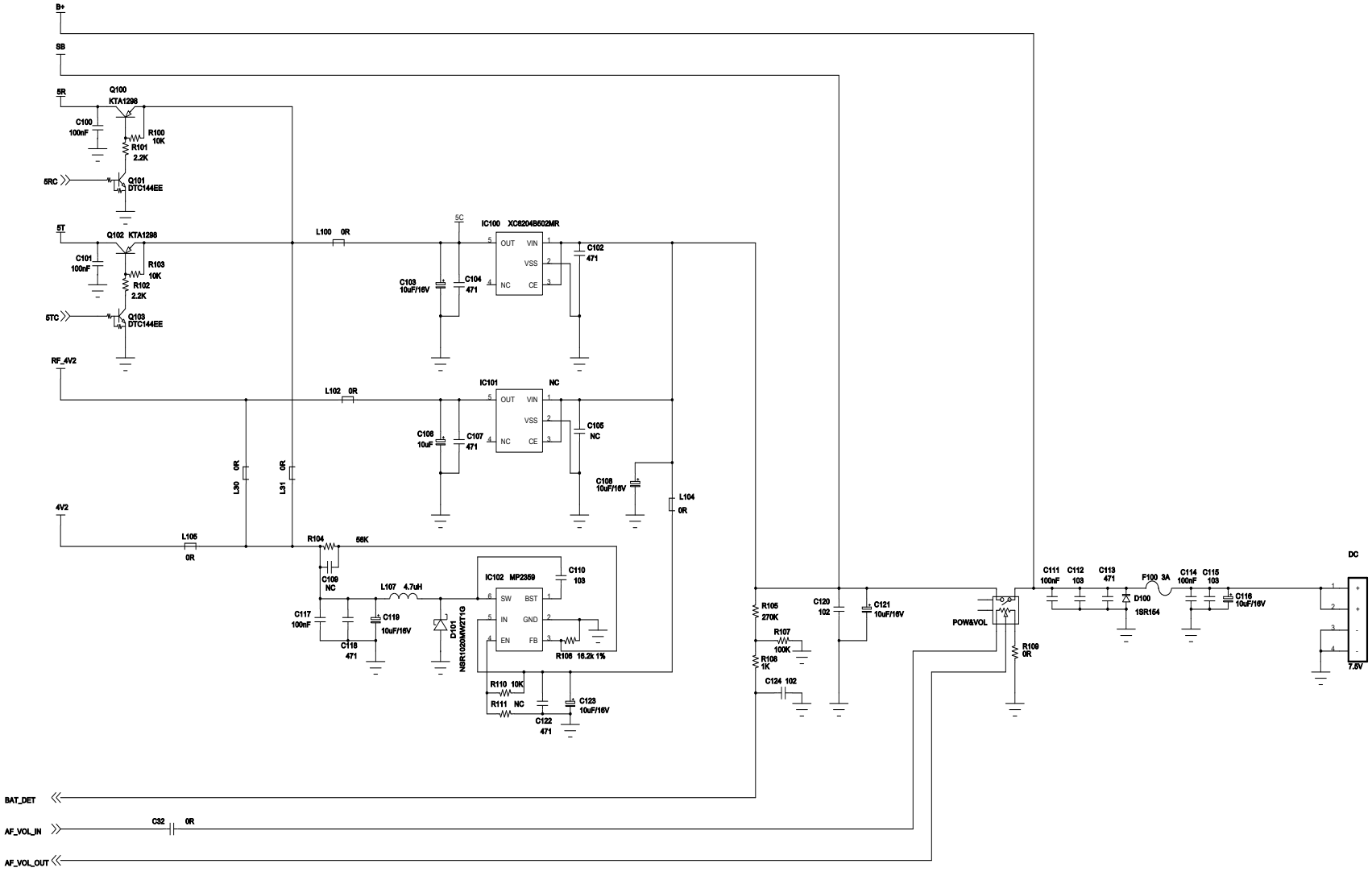

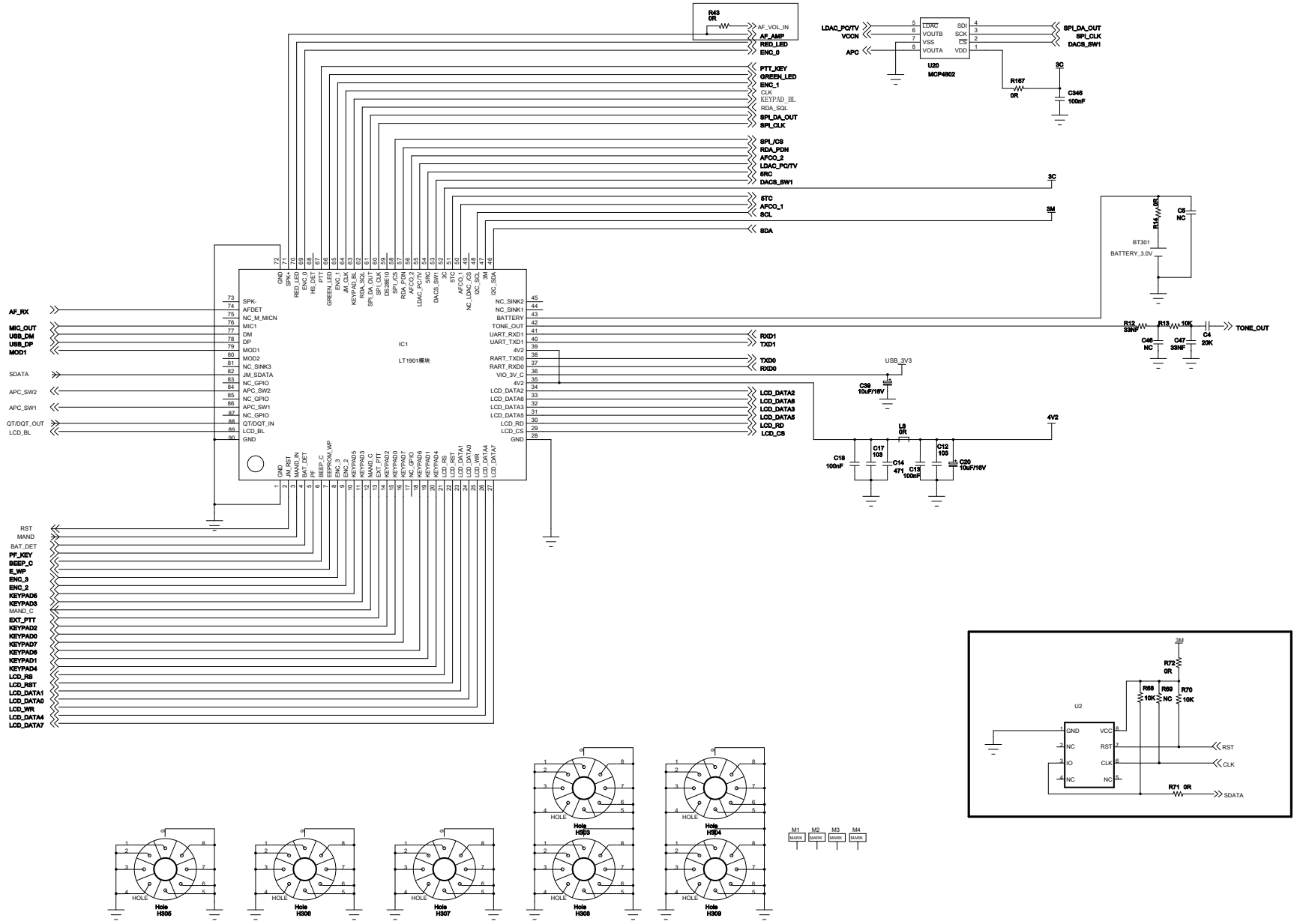
IC1
LT1901模块
U20
MCP4802
U2
BT301
BATTERY_3.0V
USB_3V3
TONE_OUT
Hole H305
Hole H306
Hole H307
Hole H308
Hole H309
Hole H303
Hole H304

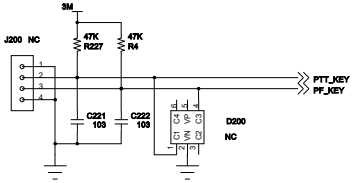
3M
J200 NC
47K R227
47K R4
PTT_KEY
PF_KEY
C221 103
C222 103
D200 NC

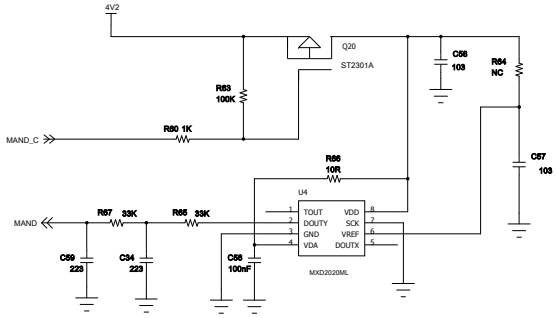
4V2
Q20
ST2301A
R63 100K
C58 103
R64 NC
MAND_C
R60 1K
R66 10R
C57 103
U4
MAND
R67 33K
R65 33K
TOUT
DOUTY
GND
VDA
VDD
SCX
VREF
DOUTX
MXD2020ML
C59 223
C34 223
C56 100nF

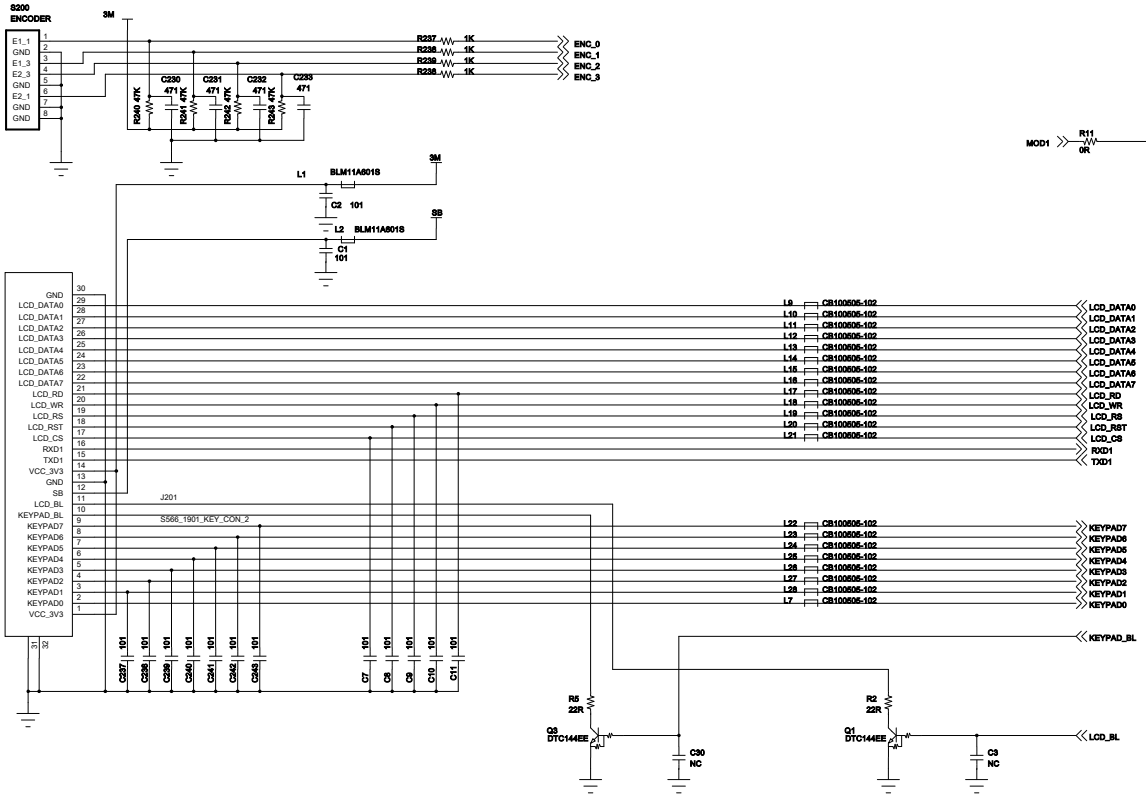
S200 ENCODER
3M
E1_1
GND
E1_3
E2_3
GND
E2_1
GND
GND
R237 1K
R238 1K
R239 1K
R236 1K
ENC_0
ENC_1
ENC_2
ENC_3
R240 47K
C230 471
R241 47K
C231 471
R242 47K
C232 471
R243 47K
C233 471
L1 BLM11A601S
C2 101
L2 BLM11A601S
C1 101
3M
SB
GND
LCD_DATA0
LCD_DATA1
LCD_DATA2
LCD_DATA3
LCD_DATA4
LCD_DATA5
LCD_DATA6
LCD_DATA7
LCD_RD
LCD_WR
LCD_RS
LCD_RST
LCD_CS
RXD1
TXD1
VCC_3V3
GND
SB
LCD_BL
KEYPAD_BL
KEYPAD7
KEYPAD6
KEYPAD5
KEYPAD4
KEYPAD3
KEYPAD2
KEYPAD1
KEYPAD0
VCC_3V3
J201
S566_1901_KEY_CON_2
L9 CB100505-102
L10 CB100505-102
L11 CB100505-102
L12 CB100505-102
L13 CB100505-102
L14 CB100505-102
L15 CB100505-102
L16 CB100505-102
L17 CB100505-102
L18 CB100505-102
L19 CB100505-102
L20 CB100505-102
L21 CB100505-102
L22 CB100505-102
L23 CB100505-102
L24 CB100505-102
L25 CB100505-102
L26 CB100505-102
L27 CB100505-102
L28 CB100505-102
L7 CB100505-102
LCD_DATA0
LCD_DATA1
LCD_DATA2
LCD_DATA3
LCD_DATA4
LCD_DATA5
LCD_DATA6
LCD_DATA7
LCD_RD
LCD_WR
LCD_RS
LCD_RST
LCD_CS
RXD1
TXD1
KEYPAD7
KEYPAD6
KEYPAD5
KEYPAD4
KEYPAD3
KEYPAD2
KEYPAD1
KEYPAD0
KEYPAD_BL
C237 101
C238 101
C239 101
C240 101
C241 101
C242 101
C243 101
C7 101
C8 101
C9 101
C10 101
C11 101
R5 22R
Q3 DTC144EE
C30 NC
R2 22R
Q1 DTC144EE
C3 NC
LCD_BL

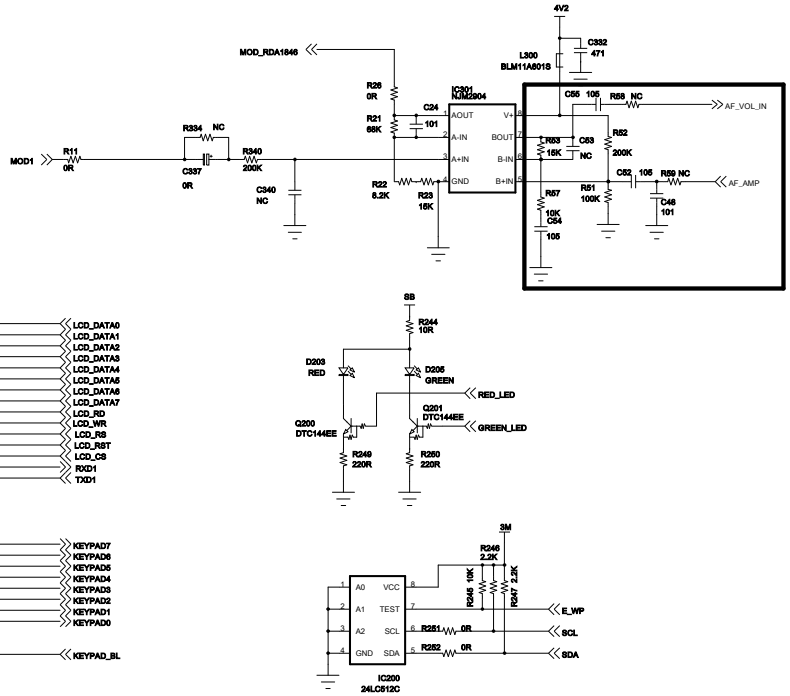
4V2
MOD_RDA1846
C332 471
L300 BLM11A601S
R26 0R
IC301 NJM2904
C24 101
R21 68K
AOUT
A-IN
A+IN
GND
V+
BOUT
B-IN
B+IN
C55 105
R58 NC
AF_VOL_IN
R53 15K
C63 NC
R52 200K
C52 105
R59 NC
AF_AMP
MOD1
R11 0R
R334 NC
C337 0R
R340 200K
C340 NC
R22 8.2K
R23 15K
R57 10K
C54 105
R51 100K
C46 101
SB
R244 10R
D203 RED
D205 GREEN
RED_LED
GREEN_LED
Q200 DTC144EE
Q201 DTC144EE
R249 220R
R250 220R
3M
R246 2.2K
R245 10K
R247 2.2K
A0
A1
A2
GND
VCC
TEST
SCL
SDA
R251 0R
R252 0R
E_WP
SCL
SDA
IC200 24LC512C

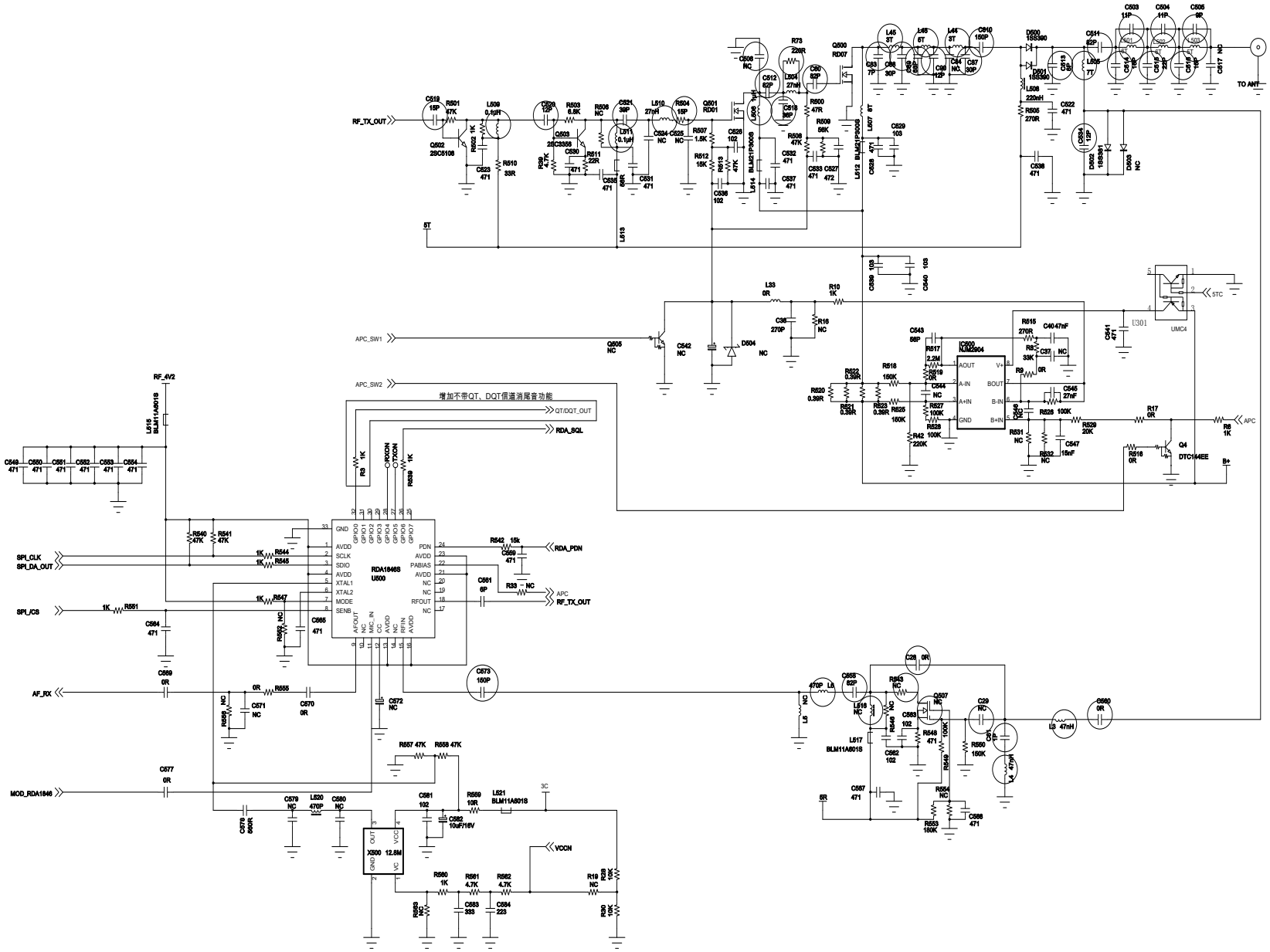
RF_TX_OUT
TO ANT
APC_SW1
APC_SW2
增加不带QT、DQT信道消尾音功能
QT/DQT_OUT
RDA_SQL
RF_4V2
SPI_CLK
SPI_DA_OUT
SPI_/CS
RDA_PDN
APC
RF_TX_OUT
AF_RX
MOD_RDA1846
VCCN
RDA1846S
U500
X500 12.8M
IC300
KIA2904
UMC4
U301
Q4
DTC114EE
B+
5TC

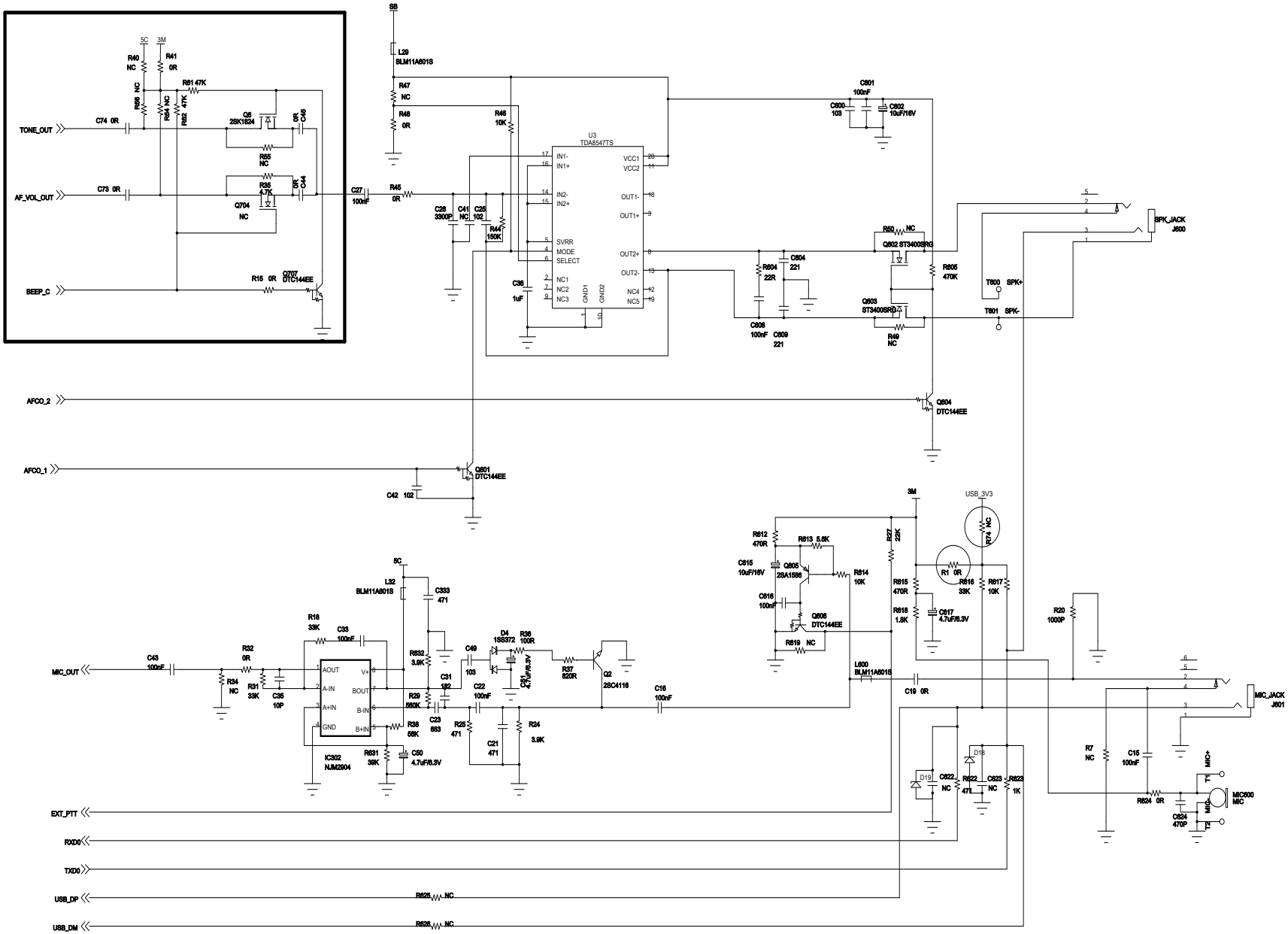
TONE_OUT
AF_VOL_OUT
BEEP_C
AFCO_2
AFCO_1
MIC_OUT
EXT_PTT
RXD0
TXD0
USB_DP
USB_DM
U3
TDA8547TS
IC302
NJM2904
SPK_JACK
J600
MIC_JACK
J601
MIC600
MIC
USB_3V3

Diagram 4 DP405-01 Motherbaord Postion Mark (6PM7-4169-HMB)

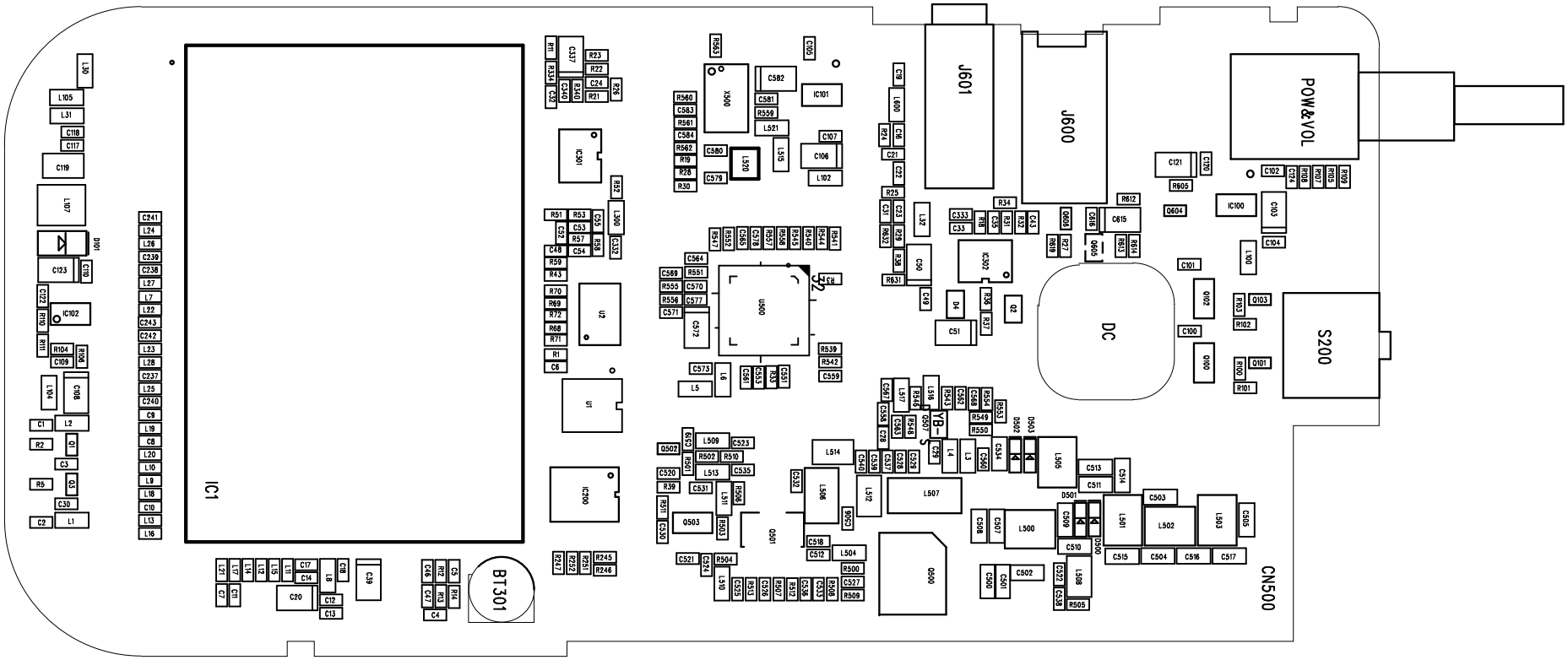

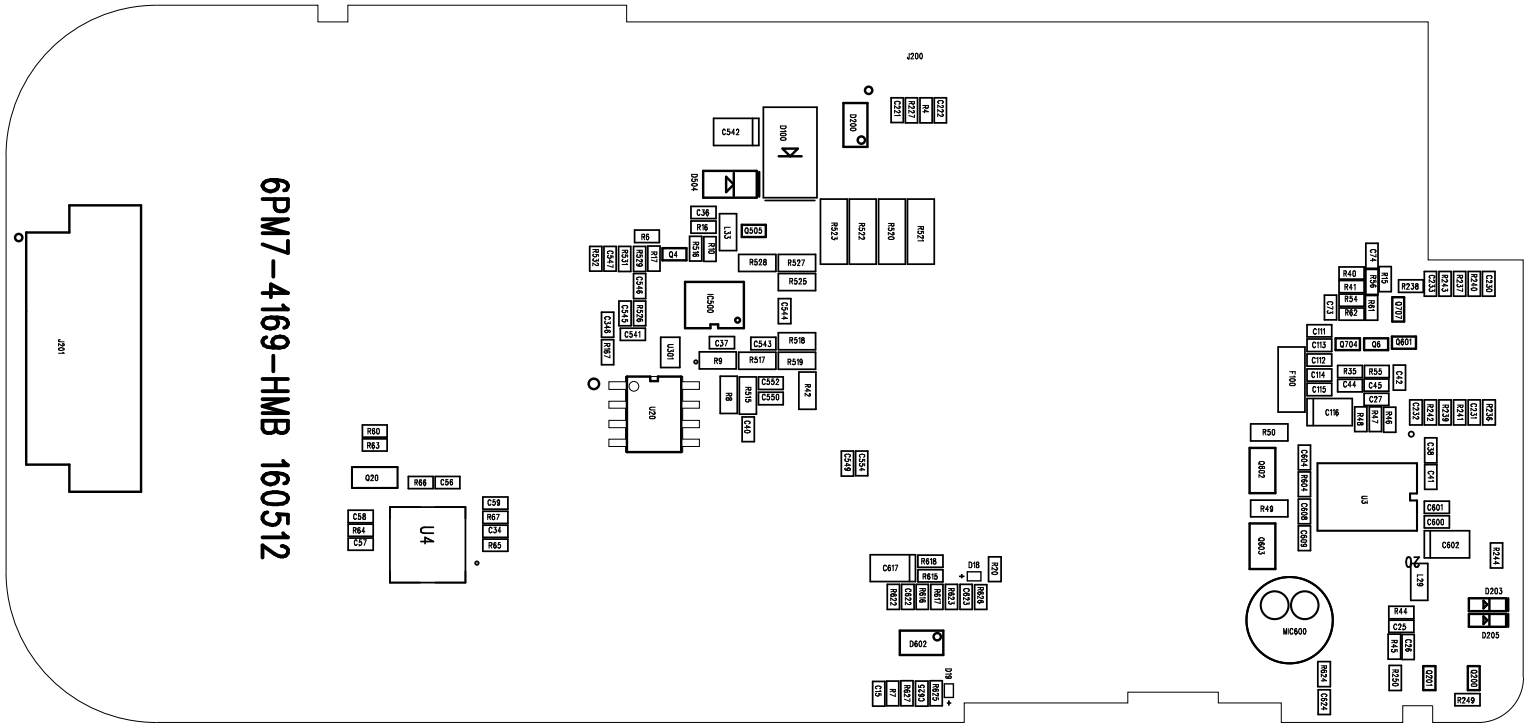
6PM7-4169-HMB 160512
J200
J201
D100
D200
D604
C542
C222
R4
R227
R237
C227
C36
R16
L33
Q505
R6
R17
Q4
R18
R36
R32
C547
R531
R529
C546
R528
R527
R525
R523
R272
R270
R271
IC500
C544
C545
R526
C346
R87
C541
U301
C37
C543
R516
R9
R517
R519
U20
R8
R315
C552
C550
R42
C40
C549
C554
R80
R63
Q20
R66
C56
C58
R64
C57
U4
C59
R67
C34
R65
C617
R618
R619
R620
R621
R622
R623
R624
R625
R626
D18
R20
D602
D19
C15
R7
R627
C35
R628
C224
R40
R41
R46
R54
R61
R62
C34
R38
R243
R237
R240
C230
R238
C33
C31
Q703
C111
C113
Q704
Q6
Q601
C112
C114
C115
F100
R35
R55
C44
C45
C42
C116
C27
R47
R48
R46
C232
R242
R239
R241
C231
R236
R50
Q802
C604
R604
C608
C609
C38
C41
U3
R49
Q603
C601
C600
C602
R244
L29
D203
D205
MIC600
R44
C25
R45
C26
R624
C624
R250
Q201
Q200
R249

Diagram 5 Module Schematic Diagram (6PD7-4038-HL1G)

AVDD_PLL FOR ANALOG PLL
CVDD_PLL FOR DIGITAL PLL
AVDD_USB FOR ANALOG USB
CVDD_USB FOR DIGITAL USB
CVDD0 FOR CORE
CVDD1 FOR COMACC
PVDD1 FOR MEMCTL1 IO
PVDD2 FOR MEMCTL0 IO
PVDD3 FOR DIGIF IO
PVDD4 FOR TDIF IO
PVDD5 FOR UART/SSI/I2S/I2C/CPR GPIO/JTAG/PWM
PVDD6 FOR SDMMCIO
PVDD8 FOR SIM0 IO
PVDD9 FOR SIM1 IO
PVDD10 FOR CAMIF IO
PVDD11 FOR NANDFLASH IO

GPIO属性

GPIO0A[0:31]	ARM/INT
GPIO0B[63:32]	DSP
GPIO1A[95:72]	DSP/INT
GPIO1B[103:96]	ARM
GPIO1C[113:104]	ARM

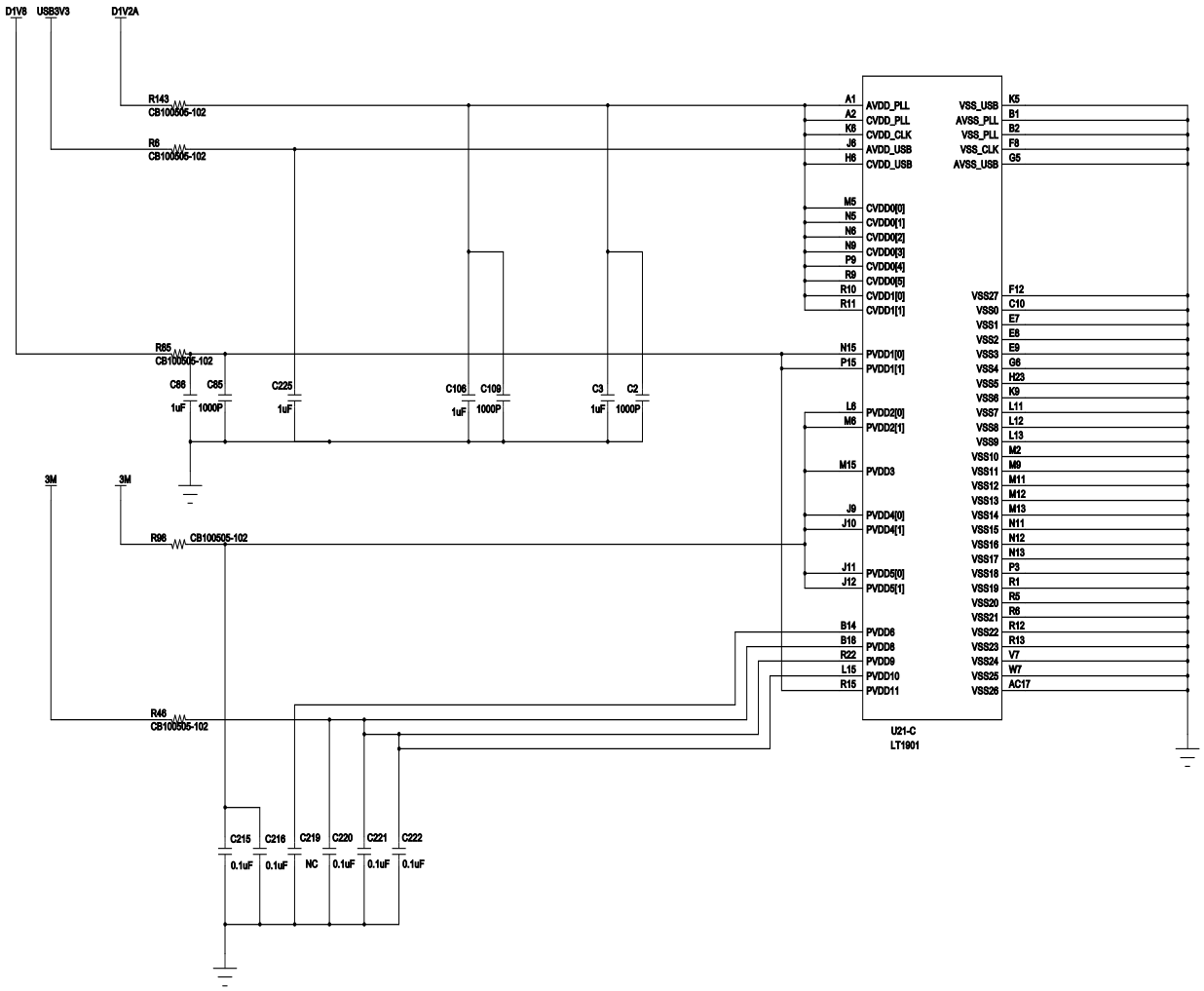

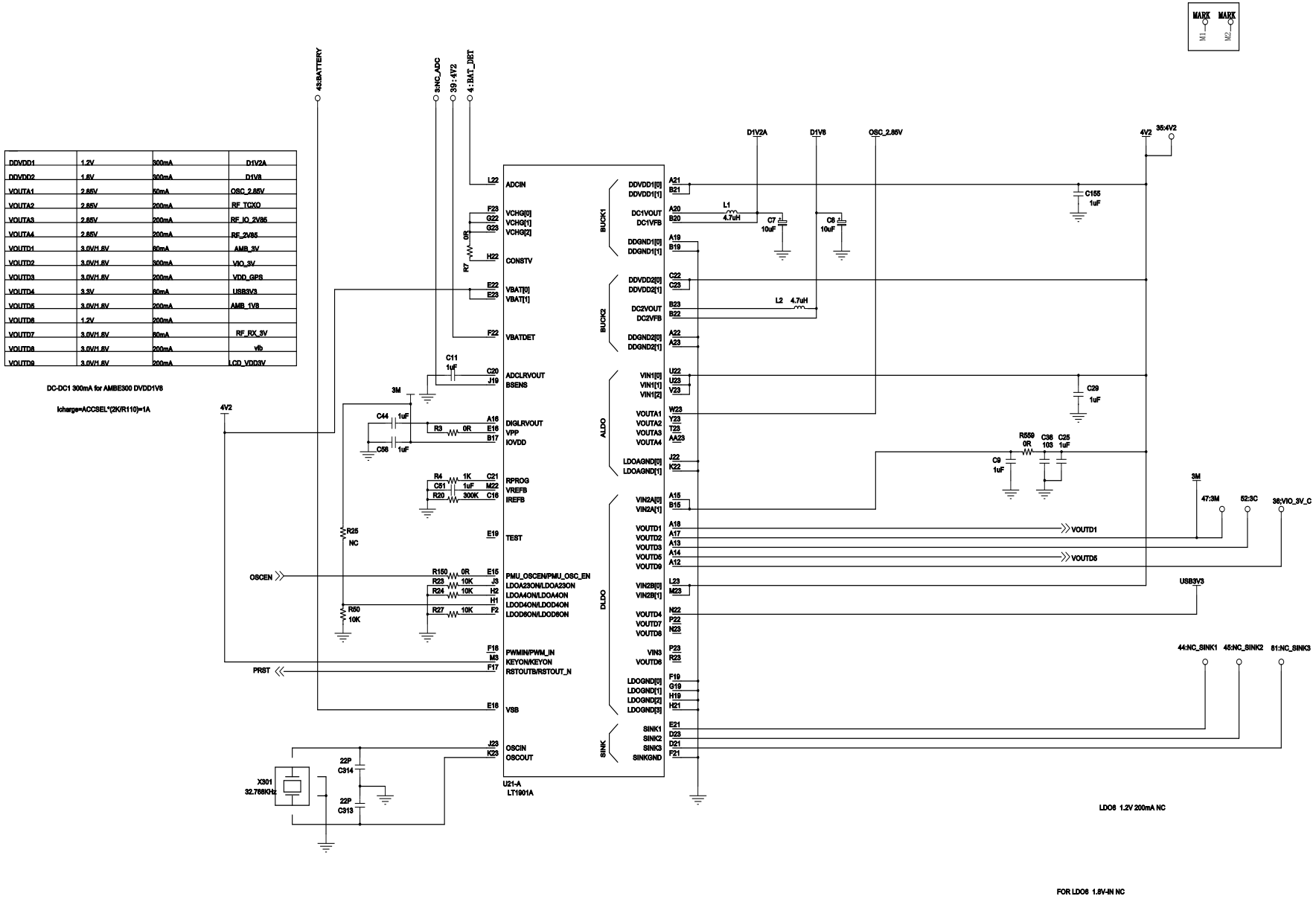
MARK
MARK
43:BATTERY
8:NC_ADC
39:4V2
4:BAT_DET
D1V2A
D1V8
OSC_2.85V
4V2
35:4V2
DDVDD1 1.2V 300mA D1V2A
DDVDD2 1.8V 300mA D1V8
VOUTA1 2.85V 50mA OSC_2.85V
VOUTA2 2.85V 200mA RF_TCXO
VOUTA3 2.85V 200mA RF_IO_2V85
VOUTA4 2.85V 200mA RF_2V85
VOUTD1 3.0V/1.8V 80mA AMB_3V
VOUTD2 3.0V/1.8V 300mA VIO_3V
VOUTD3 3.0V/1.8V 200mA VDD_GPS
VOUTD4 3.3V 80mA USB3V3
VOUTD5 3.0V/1.8V 200mA AMB_1V8
VOUTD6 1.2V 200mA
VOUTD7 3.0V/1.8V 80mA RF_RX_3V
VOUTD8 3.0V/1.8V 200mA vib
VOUTD9 3.0V/1.8V 200mA LCD_VDD3V
DC-DC1 300mA for AMBE300 DVDD1V8
Icharge=ACCSEL*(2K/R110)=1A
ADCIN
VCHG[0]
VCHG[1]
VCHG[2]
CONSTV
VBAT[0]
VBAT[1]
VBATDET
ADCLRVOUT
BSENS
DIGLRVOUT
VPP
IOVDD
RPROG
VREFB
IREFB
TEST
PMU_OSCEN/PMU_OSC_EN
LDOA23ON/LDOA23ON
LDOA40N/LDOA40N
LDOD40N/LDOD40N
LDOD80N/LDOD80N
PWMIN/PWM_IN
KEYON/KEYON
RSTOUTB/RSTOUT_N
VSB
OSCIN
OSCOUT
U21-A
LT1901A
BUCK1
BUCK2
ALDO
DLDO
SINK
DDVDD1[0]
DDVDD1[1]
DC1VOUT
DC1VFB
DDGND1[0]
DDGND1[1]
DDVDD2[0]
DDVDD2[1]
DC2VOUT
DC2VFB
DDGND2[0]
DDGND2[1]
VIN1[0]
VIN1[1]
VIN1[2]
VOUTA1
VOUTA2
VOUTA3
VOUTA4
LDOAGND[0]
LDOAGND[1]
VIN2A[0]
VIN2A[1]
VOUTD1
VOUTD2
VOUTD3
VOUTD5
VOUTD9
VIN2B[0]
VIN2B[1]
VOUTD4
VOUTD7
VOUTD8
VIN3
VOUTD6
LDOGND[0]
LDOGND[1]
LDOGND[2]
LDOGND[3]
SINK1
SINK2
SINK3
SINKGND
L1 4.7uH
L2 4.7uH
C7 10uF
C8 10uF
C155 1uF
C29 1uF
C9 1uF
R559 0R
C36 103
C25 1uF
3M
47:3M
52:3C
36:VIO_3V_C
VOUTD1
VOUTD5
USB3V3
44:NC_SINK1
45:NC_SINK2
81:NC_SINK3
LDO8 1.2V 200mA NC
FOR LDO8 1.8V-IN NC
C11 1uF
C44 1uF
C56 1uF
R3 0R
R7 0R
R4 1K
C51 1uF
R20 300K
R25 NC
R50 10K
R150 0R
R23 10K
R24 10K
R27 10K
OSCEN
PRST
X301 32.768KHz
22P C314
22P C313

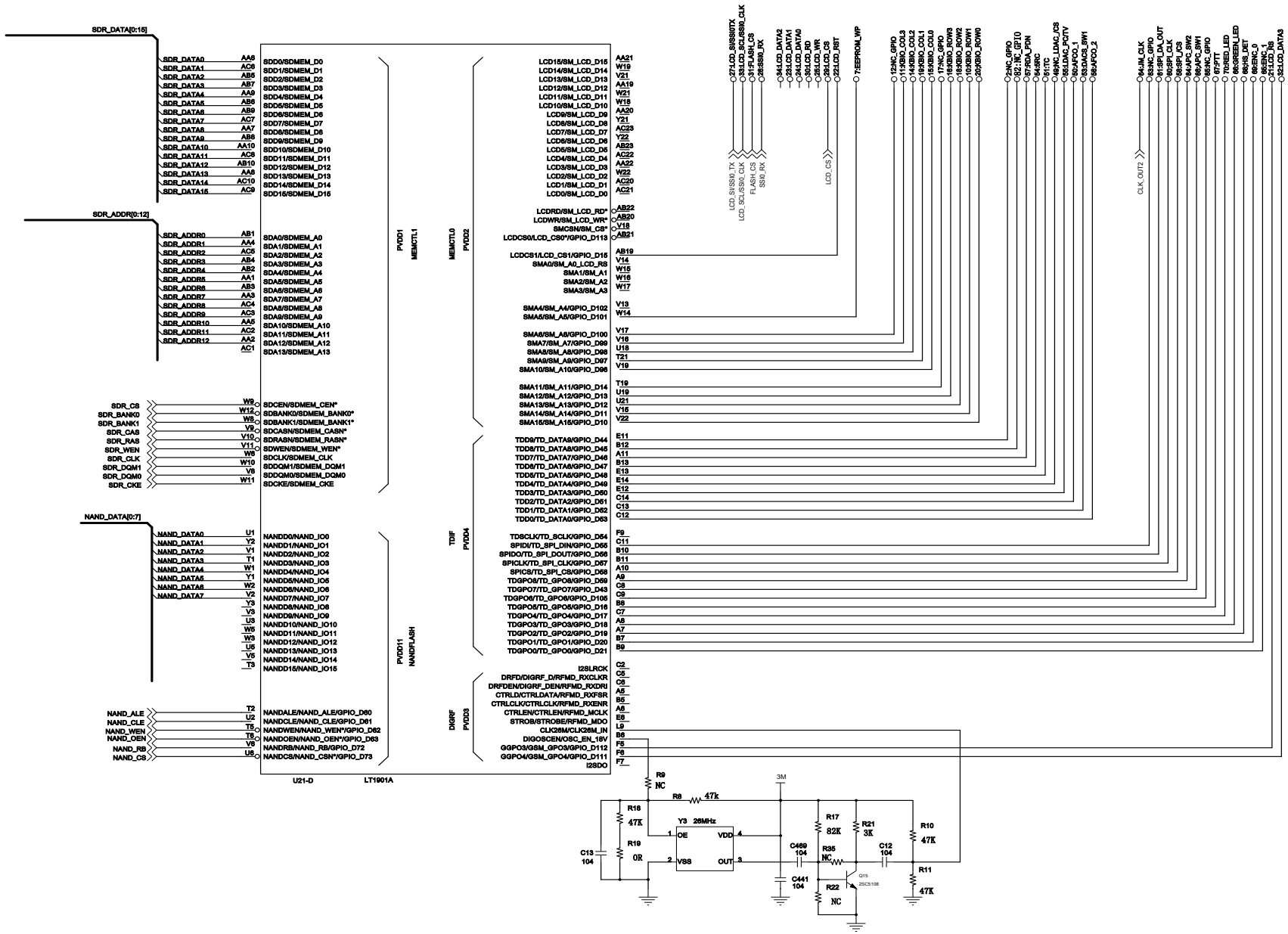
SDR_DATA[0:15]
SDR_ADDR[0:12]
SDR_CS
SDR_BANK0
SDR_BANK1
SDR_CAS
SDR_RAS
SDR_WEN
SDR_CLK
SDR_DQM1
SDR_DQM0
SDR_CKE
NAND_DATA[0:7]
NAND_ALE
NAND_CLE
NAND_WEN
NAND_OEN
NAND_RB
NAND_CS
PVDD1
MEMCTL1
MEMCTL0
PVDD2
TDIF
PVDD4
PVDD11
NANDFLASH
DIGRF
PVDD3
U21-D
LT1901A
LCD_SI/SS0_TX
LCD_SCL/SS0_CLK
FLASH_CS
SS0_RX
LCD_CS
CLK_OUT2
R9
NC
R8
47k
3M
R18
47K
R19
0R
C13
104
Y3 26MHz
OE
VDD
VSS
OUT
C469
104
C441
104
R17
82K
R21
3K
R35
NC
R22
NC
Q15
2SC5108
C12
104
R10
47K
R11
47K

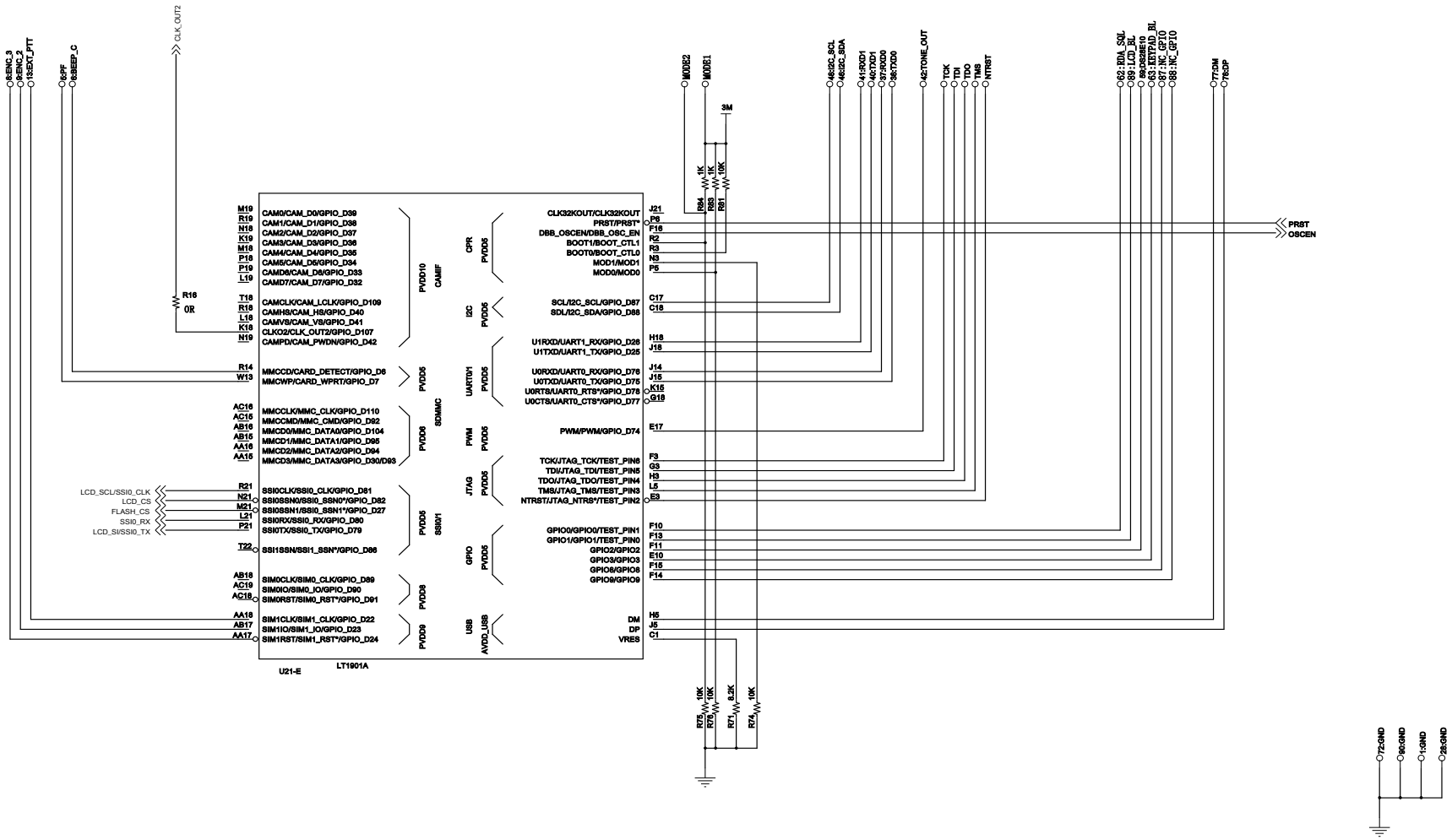

GPIO属性

GPIO0A[31:0]	ARM/INT
GPIO0B[63:32]	DSP
GPIO1A[95:72]	DSP/INT
GPIO1B[103:96]	ARM
GPIO1C[113:104]	DSP

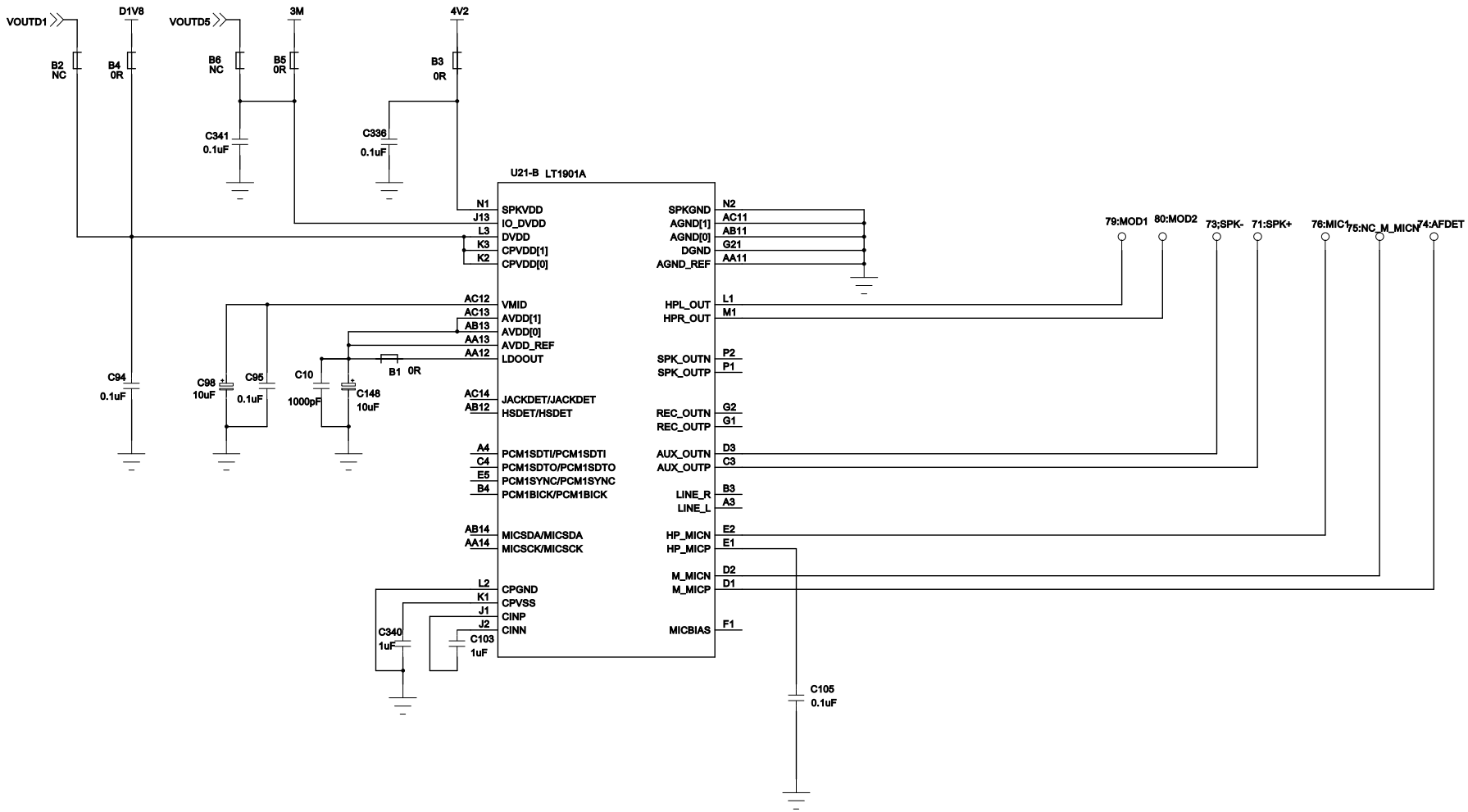
VOUTD1
D1V8
VOUTD5
3M
4V2
B2 NC
B4 0R
B6 NC
B5 0R
B3 0R
C341 0.1uF
C336 0.1uF
U21-B LT1901A
N1 SPKVDD
J13 IO_DVDD
L3 DVDD
K3 CPVDD[1]
K2 CPVDD[0]
AC12 VMID
AC13 AVDD[1]
AB13 AVDD[0]
AA13 AVDD_REF
AA12 LDOOUT
AC14 JACKDET/JACKDET
AB12 HSDET/HSDET
A4 PCM1SDTI/PCM1SDTI
C4 PCM1SDTO/PCM1SDTO
E5 PCM1SYNC/PCM1SYNC
B4 PCM1BICK/PCM1BICK
AB14 MICSDA/MICSDA
AA14 MICSCK/MICSCK
L2 CPGND
K1 CPVSS
J1 CINP
J2 CINN
SPKGND N2
AGND[1] AC11
AGND[0] AB11
DGND G21
AGND_REF AA11
HPL_OUT L1
HPR_OUT M1
SPK_OUTN P2
SPK_OUTP P1
REC_OUTN G2
REC_OUTP G1
AUX_OUTN D3
AUX_OUTP C3
LINE_R B3
LINE_L A3
HP_MICN E2
HP_MICP E1
M_MICN D2
M_MICP D1
MICBIAS F1
79:MOD1
80:MOD2
73;SPK-
71:SPK+
76:MIC1
75:NC_M_MICN
74:AFDET
C94 0.1uF
C98 10uF
C95 0.1uF
C10 1000pF
C148 10uF
B1 0R
C340 1uF
C103 1uF
C105 0.1uF

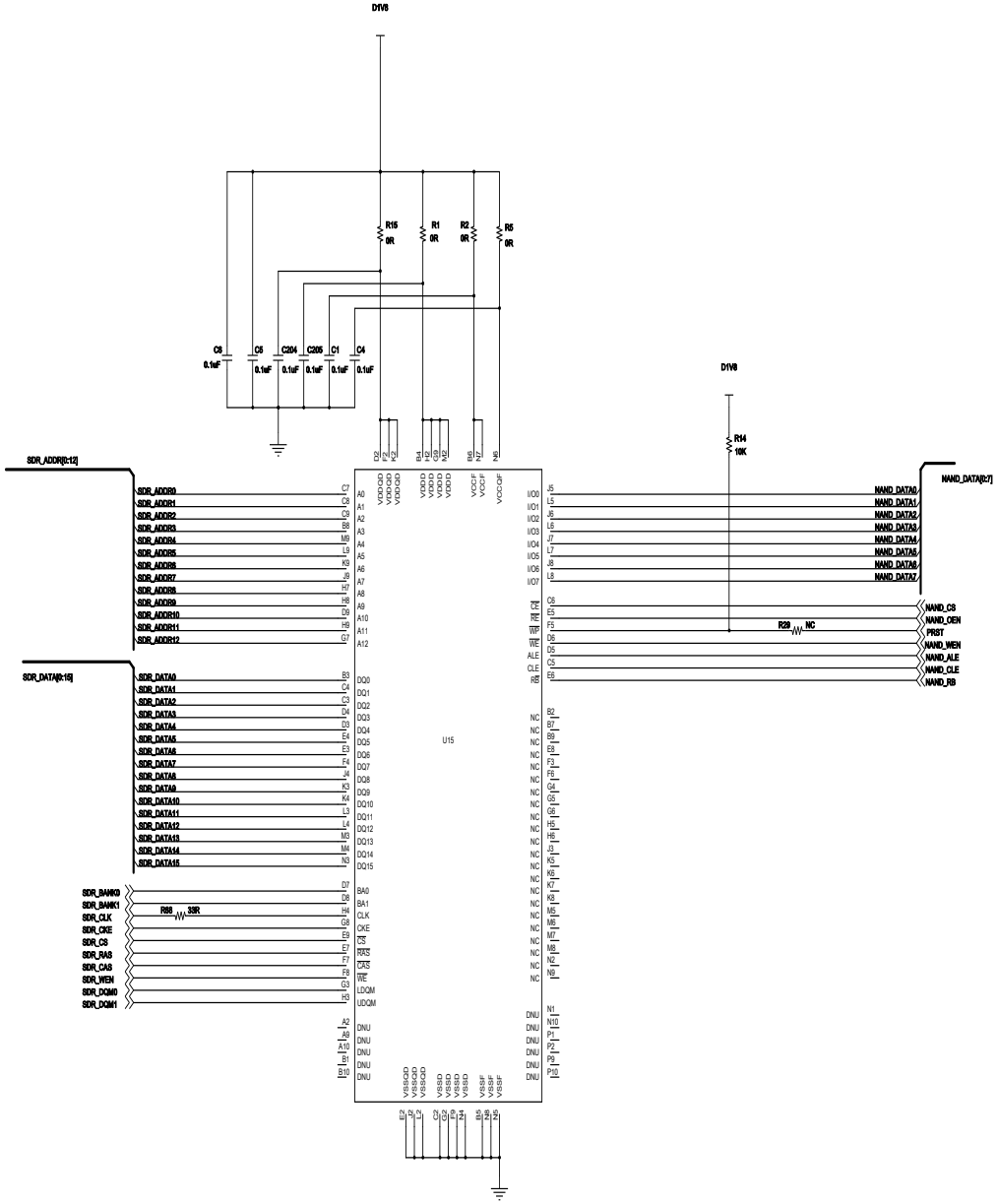
D1V8
R15 0R
R1 0R
R2 0R
R5 0R
C8 0.1uF
C5 0.1uF
C204 0.1uF
C205 0.1uF
C1 0.1uF
C4 0.1uF
D1V8
R14 10K
SDR_ADDR[0:12]
SDR_ADDR0
SDR_ADDR1
SDR_ADDR2
SDR_ADDR3
SDR_ADDR4
SDR_ADDR5
SDR_ADDR6
SDR_ADDR7
SDR_ADDR8
SDR_ADDR9
SDR_ADDR10
SDR_ADDR11
SDR_ADDR12
SDR_DATA[0:15]
SDR_DATA0
SDR_DATA1
SDR_DATA2
SDR_DATA3
SDR_DATA4
SDR_DATA5
SDR_DATA6
SDR_DATA7
SDR_DATA8
SDR_DATA9
SDR_DATA10
SDR_DATA11
SDR_DATA12
SDR_DATA13
SDR_DATA14
SDR_DATA15
SDR_BANK0
SDR_BANK1
SDR_CLK
SDR_CKE
SDR_CS
SDR_RAS
SDR_CAS
SDR_WEN
SDR_DQM0
SDR_DQM1
R88 33R
U15
NAND_DATA[0:7]
NAND_DATA0
NAND_DATA1
NAND_DATA2
NAND_DATA3
NAND_DATA4
NAND_DATA5
NAND_DATA6
NAND_DATA7
NAND_CS
NAND_OEN
PRST
NAND_WEN
NAND_ALE
NAND_CLE
NAND_RB
R29 NC

Diagram 6 Module Postion Mark (6PD7-4038-HL1G)

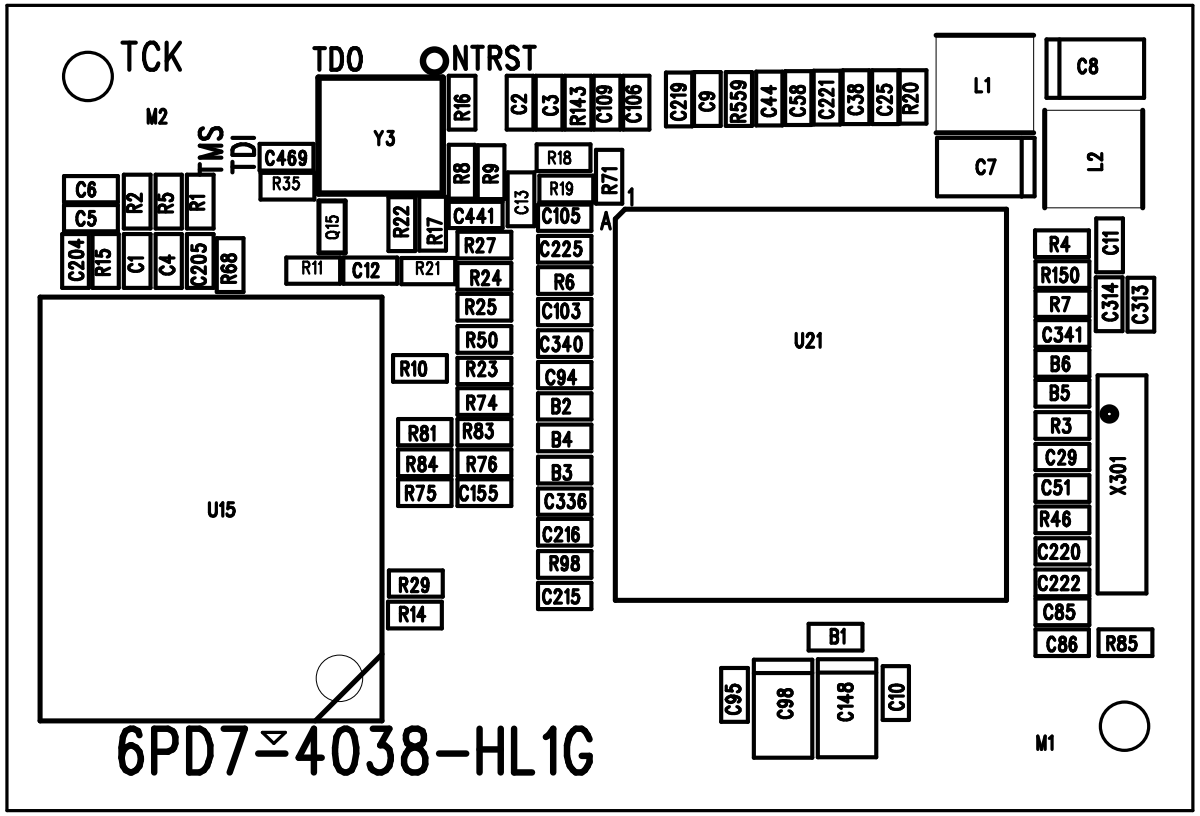

Appendix 6 Schematic Disagram and Postion Mark

Diagram 1 DP405-02 Motherbaord Schematic Diagram (6PM7-4169-HMF)

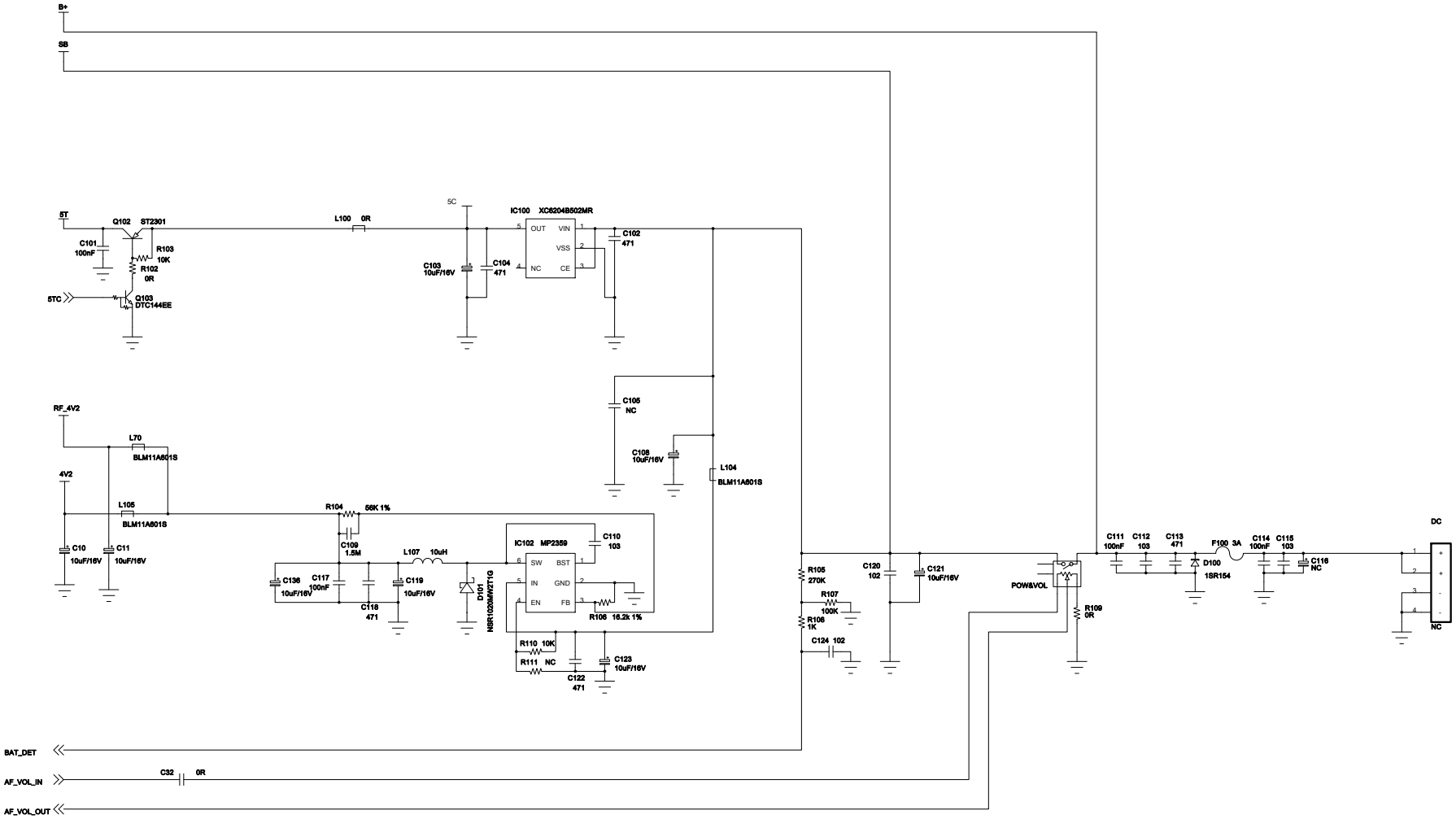

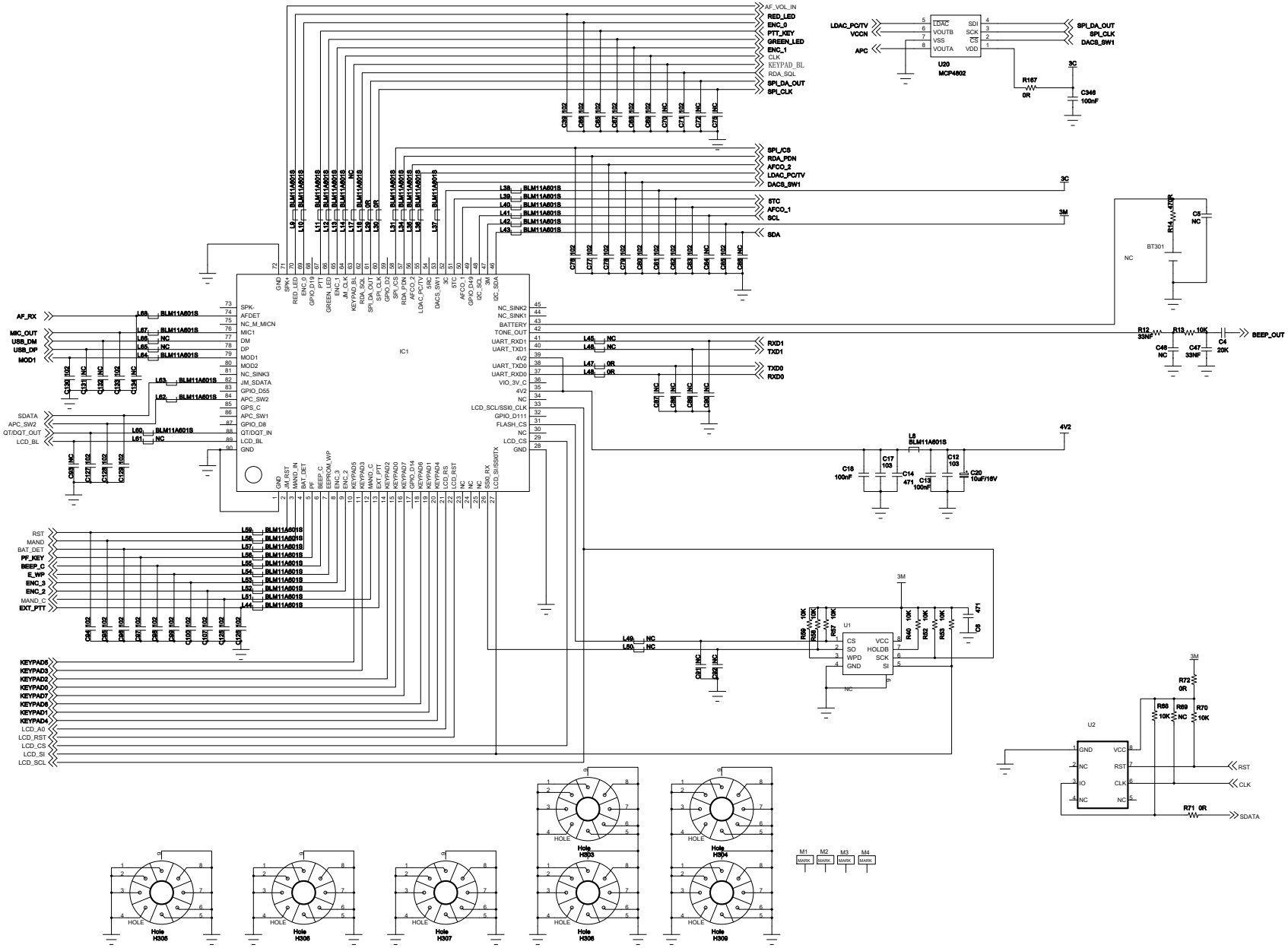
IC1
U20
MCP4802
U1
U2
BT301
AF_RX
MIC_OUT
USB_DM
USB_DP
MOD1
SDATA
APC_SW2
QT/DQT_OUT
LCD_BL
RST
MAND
BAT_DET
PF_KEY
BEEP_C
E_WP
ENC_3
ENC_2
MAND_C
EXT_PTT
KEYPAD6
KEYPAD3
KEYPAD2
KEYPAD0
KEYPAD7
KEYPAD5
KEYPAD1
KEYPAD4
LCD_A0
LCD_RST
LCD_CS
LCD_SI
LCD_SCL
AF_VOL_IN
RED_LED
ENC_0
PTT_KEY
GREEN_LED
ENC_1
CLK
KEYPAD_BL
RDA_SQL
SPI_DA_OUT
SPI_CLK
SPI_/CS
RDA_PDN
APCO_2
LDAC_PC/TV
DACS_SW1
5TC
APCO_1
SCL
SDA
RXD1
TXD1
TXD0
RXD0
BEEP_OUT
RST
CLK
SDATA
Hole H303
Hole H304
Hole H305
Hole H306
Hole H307
Hole H308
Hole H309
HOLE

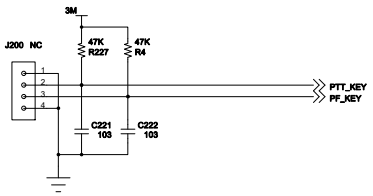
3M
J200 NC
47K R227
47K R4
PTT_KEY
PF_KEY
C221 103
C222 103

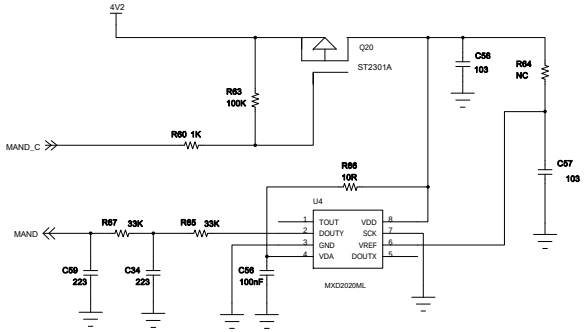
4V2
Q20
ST2301A
C56 103
R64 NC
R63 100K
MAND_C
R60 1K
R66 10R
C57 103
U4
MAND
R67 33K
R65 33K
TOUT
DOUTY
GND
VDA
VDD
SCK
VREF
DOUTX
C59 223
C34 223
C58 100nF
MXD2020ML

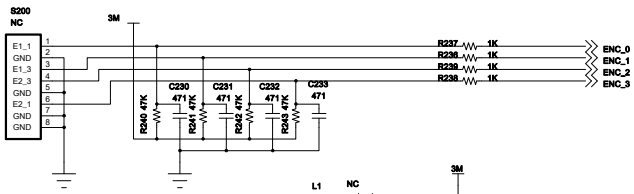
S200 NC
3M
E1_1
GND
E1_1
E2_3
GND
E2_1
GND
GND
R237 1K
R238 1K
R239 1K
R238 1K
ENC_0
ENC_1
ENC_2
ENC_3
R240 47K
C230 471
R241 47K
C231 471
R242 47K
C232 471
R243 47K
C233 471

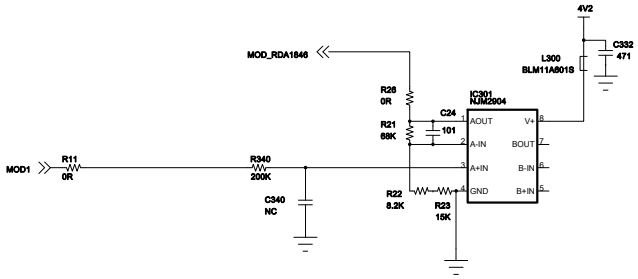
4V2
C332 471
MOD_RDA1846
L300 BLM11A601S
R26 0R
IC301 NJM2904
C24 101
R21 68K
AOUT
A-IN
A+IN
GND
BOUT
B-IN
B+IN
V+
MOD1
R11 0R
R340 200K
C340 NC
R22 8.2K
R23 15K

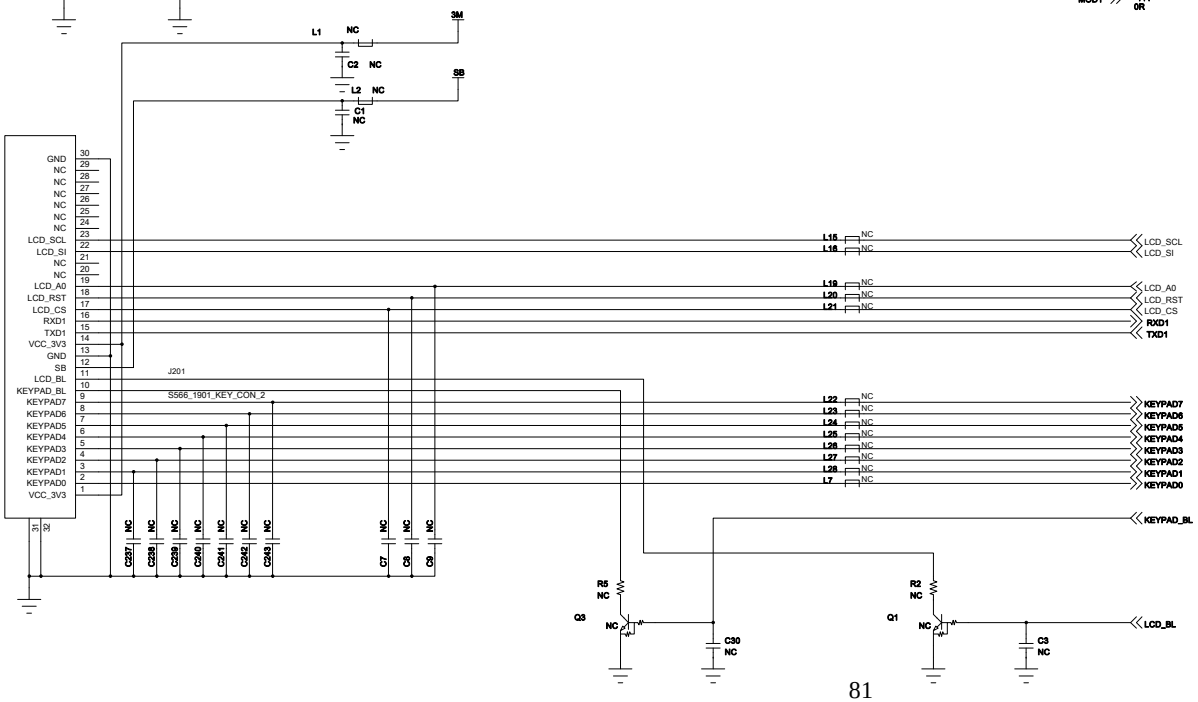
3M
L1 NC
C2 NC
SB
L2 NC
C1 NC
GND
NC
LCD_SCL
LCD_SI
LCD_A0
LCD_RST
LCD_CS
RXD1
TXD1
VCC_3V3
SB
LCD_BL
KEYPAD_BL
KEYPAD7
KEYPAD6
KEYPAD5
KEYPAD4
KEYPAD3
KEYPAD2
KEYPAD1
KEYPAD0
VCC_3V3
J201
S566_1901_KEY_CON_2
L15 NC
L16 NC
L19 NC
L20 NC
L21 NC
L22 NC
L23 NC
L24 NC
L25 NC
L26 NC
L27 NC
L28 NC
L7 NC
LCD_SCL
LCD_SI
LCD_A0
LCD_RST
LCD_CS
RXD1
TXD1
KEYPAD7
KEYPAD6
KEYPAD5
KEYPAD4
KEYPAD3
KEYPAD2
KEYPAD1
KEYPAD0
KEYPAD_BL
C237 NC
C238 NC
C239 NC
C240 NC
C241 NC
C242 NC
C243 NC
C7 NC
C8 NC
C9 NC
R5 NC
Q3 NC
C30 NC
R2 NC
Q1 NC
C3 NC
LCD_BL

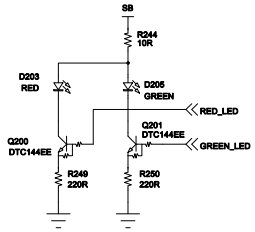
SB
R244 10R
D203 RED
D205 GREEN
RED_LED
Q200 DTC144EE
Q201 DTC144EE
GREEN_LED
R249 220R
R250 220R

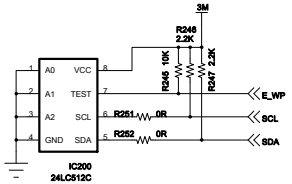
3M
R248 2.2K
R246 10K
R247 2.2K
A0
A1
A2
GND
VCC
TEST
SCL
SDA
E_WP
R251 0R
SCL
R252 0R
SDA
IC200 24LC512C

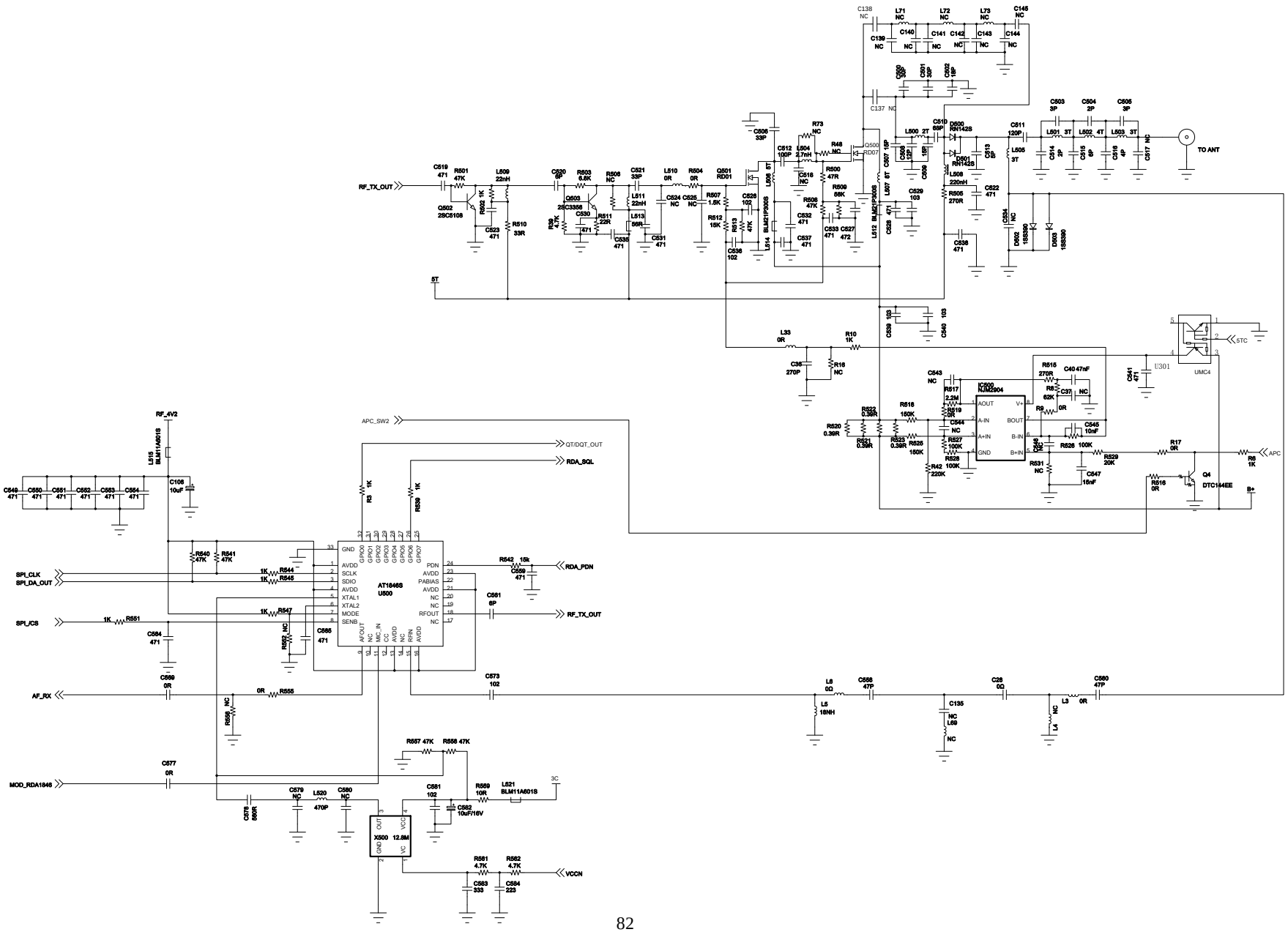
RF_TX_OUT
TO ANT
APC_SW2
QT/DQT_OUT
RDA_SQL
RDA_PDN
RF_TX_OUT
SPI_CLK
SPI_DA_OUT
SPI_CS
AF_RX
MOD_RDA1846
VCCN
APC
B+
AT1846S
U500
X500 12.8M
IC500 NJM2904
Q4 DTC144EE
U301
UMC4
RF_4V2

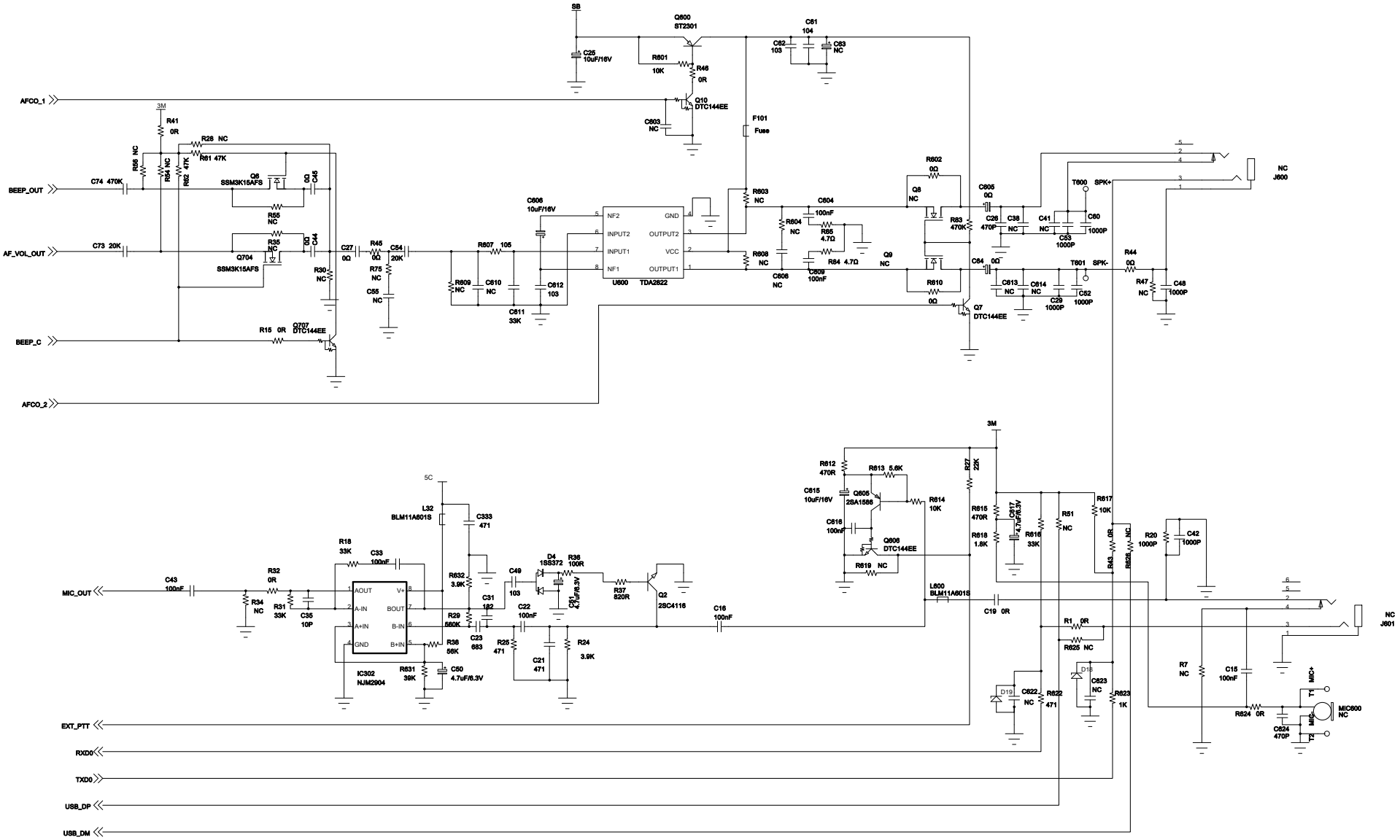
AFCO_1
BEEP_OUT
AF_VOL_OUT
BEEP_C
AFCO_2
MIC_OUT
EXT_PTT
RXD0
TXD0
USB_DP
USB_DM
SB
Q800 ST2301
C25 10uF/16V
R501 10K
R46 0R
Q10 DTC144EE
C603 NC
C61 104
C62 103
C63 NC
F101 Fuse
3M
R41 0R
R28 NC
R61 47K
R56 NC
R54 NC
R62 47K
Q6 SSM3K15AFS
C74 470K
C73 20K
R55 NC
R35 NC
Q704 SSM3K15AFS
R30 NC
R15 0R
Q707 DTC144EE
C27 0Ω
R45 0Ω
R75 NC
C54 20K
C55 NC
R607 105
R609 NC
C610 NC
C611 33K
C606 10uF/16V
C612 103
U600 TDA2822
NF2
INPUT2
INPUT1
NF1
GND
OUTPUT2
VCC
OUTPUT1
R603 NC
R608 NC
R604 NC
C604 100nF
R85 4.7Ω
R84 4.7Ω
C606 NC
C609 100nF
R602 0Ω
Q8 NC
Q9 NC
R610 0Ω
Q7 DTC144EE
C605 0Ω
R83 470K
C26 470P
C38 NC
C41 NC
C53 1000P
C60 1000P
T600 SPK+
NC J600
C84 0Ω
C613 NC
C614 NC
C29 1000P
C52 1000P
T601 SPK-
R44 0Ω
R47 NC
C48 1000P
5C
L32 BLM11A601S
C333 471
R18 33K
C33 100nF
R32 0R
C43 100nF
R34 NC
R31 33K
C35 10P
IC302 NJM2904
AOUT
A-IN
A+IN
GND
V+
BOUT
B-IN
B+IN
R632 3.9K
R29 560K
C31 182
C23 683
R36 56K
R631 39K
C50 4.7uF/6.3V
C49 103
D4 1SS372
R36 100R
C51 4.7uF/6.3V
C22 100nF
R25 471
C21 471
R24 3.9K
R37 820R
Q2 2SC4116
C16 100nF
R612 470R
R613 5.6K
C615 10uF/16V
Q605 2SA1586
R614 10K
C616 100nF
Q606 DTC144EE
R619 NC
R27 22K
R615 470R
R618 1.8K
C617 4.7uF/6.3V
R616 33K
R51 NC
R617 10K
R43 0R
R626 NC
R20 1000P
C42 1000P
L600 BLM11A601S
C19 0R
R1 0R
R625 NC
D18
C823 NC
R623 1K
D19
C622 NC
R622 471
R7 NC
C15 100nF
R624 0R
C624 470P
MIC+
MIC-
T1
T2
MIC600 NC
NC J601

Diagram 2 DP405-02 Motherboard Position Mark (6PM7-4169-HM F)

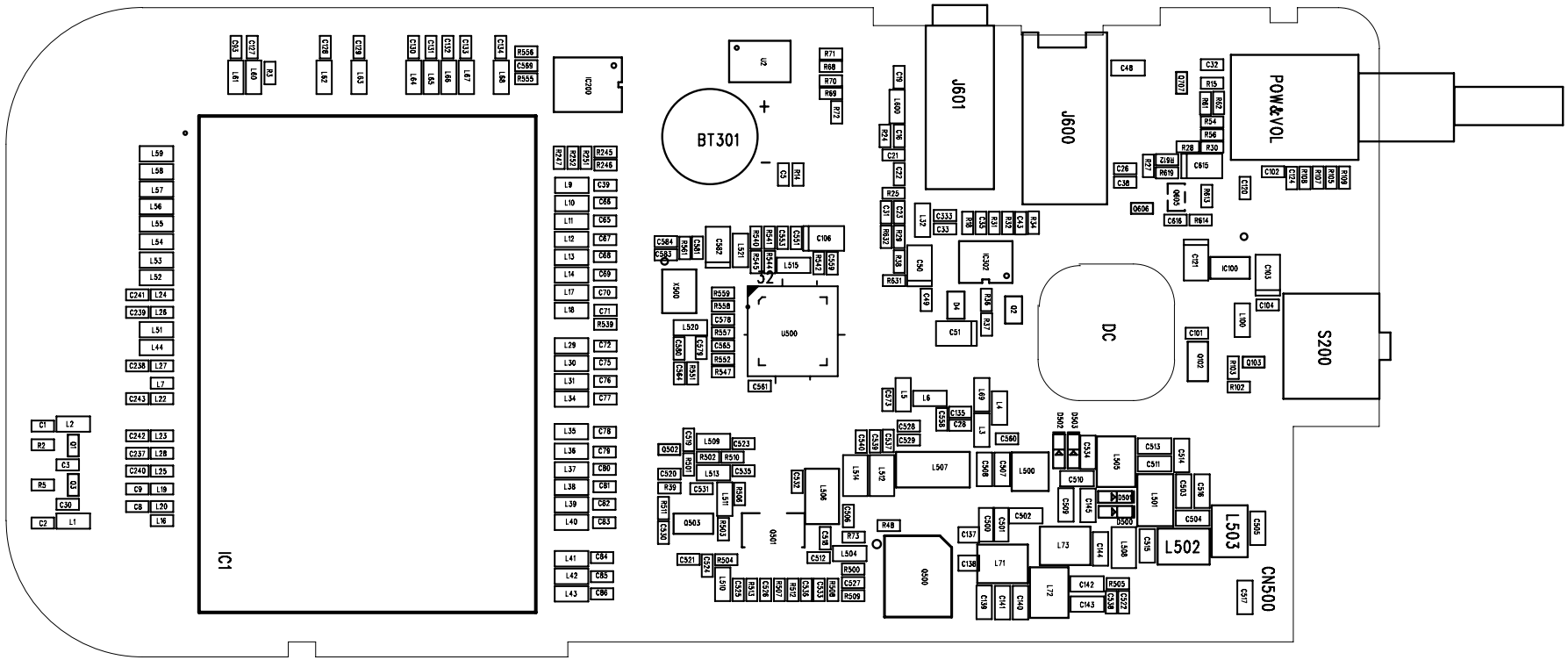

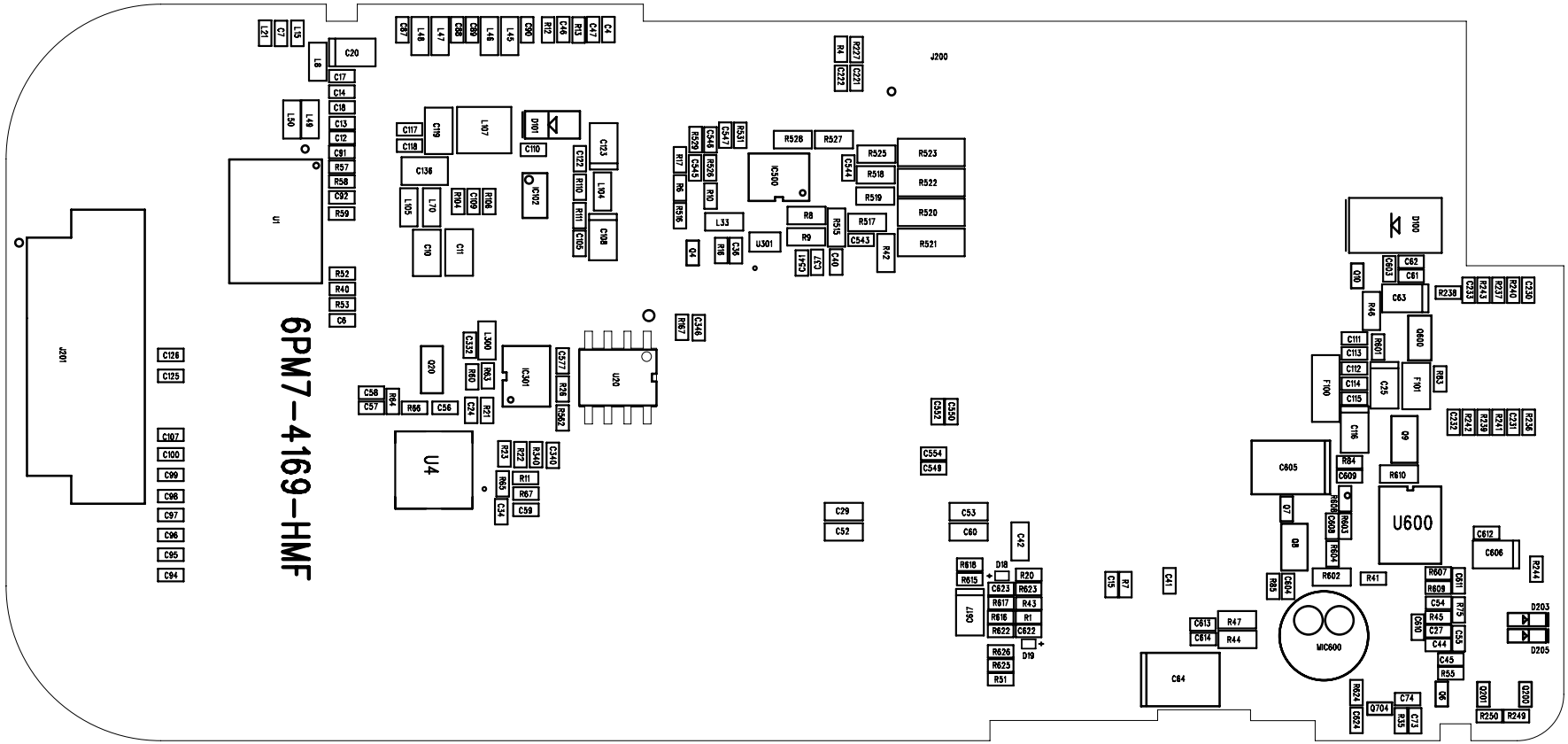
6PM7-4169-HMF
J201
J200
U1
U4
U20
U600
IC301
IC500
IC102
U301
D100
D101
D18
D19
D203
D205
MIC600
F100
F101
Q4
Q6
Q7
Q8
Q9
Q10
Q20
Q200
Q201
Q600
Q704
L8
L15
L21
L33
L45
L46
L47
L48
L49
L50
L70
L104
L105
L107
L300
C4
C6
C7
C10
C11
C12
C13
C14
C17
C18
C20
C24
C25
C27
C29
C34
C36
C37
C40
C41
C42
C44
C45
C47
C52
C53
C54
C55
C56
C57
C58
C59
C60
C61
C62
C63
C64
C73
C74
C87
C88
C89
C90
C91
C92
C94
C95
C96
C97
C98
C99
C100
C107
C108
C109
C110
C111
C112
C113
C114
C115
C116
C117
C118
C119
C122
C123
C125
C126
C136
C221
C222
C230
C231
C232
C233
C332
C340
C346
C543
C544
C545
C546
C547
C549
C550
C552
C554
C577
C603
C604
C605
C606
C608
C609
C610
C611
C612
C613
C614
C617
C622
C623
C624
R1
R4
R6
R7
R8
R9
R11
R12
R13
R16
R17
R20
R21
R22
R23
R26
R35
R40
R41
R42
R43
R44
R45
R46
R47
R51
R52
R53
R55
R57
R58
R59
R60
R63
R64
R65
R66
R67
R75
R83
R84
R85
R104
R106
R110
R111
R167
R227
R236
R237
R238
R239
R240
R241
R242
R243
R244
R249
R250
R340
R515
R517
R518
R519
R520
R521
R522
R523
R525
R526
R527
R528
R529
R531
R556
R562
R601
R602
R603
R604
R607
R608
R609
R610
R615
R616
R617
R618
R622
R623
R624
R625
R626

Diagram 3 DP405-01 Motherbaord Schematic Diagram (6PM7-4169-HMF)

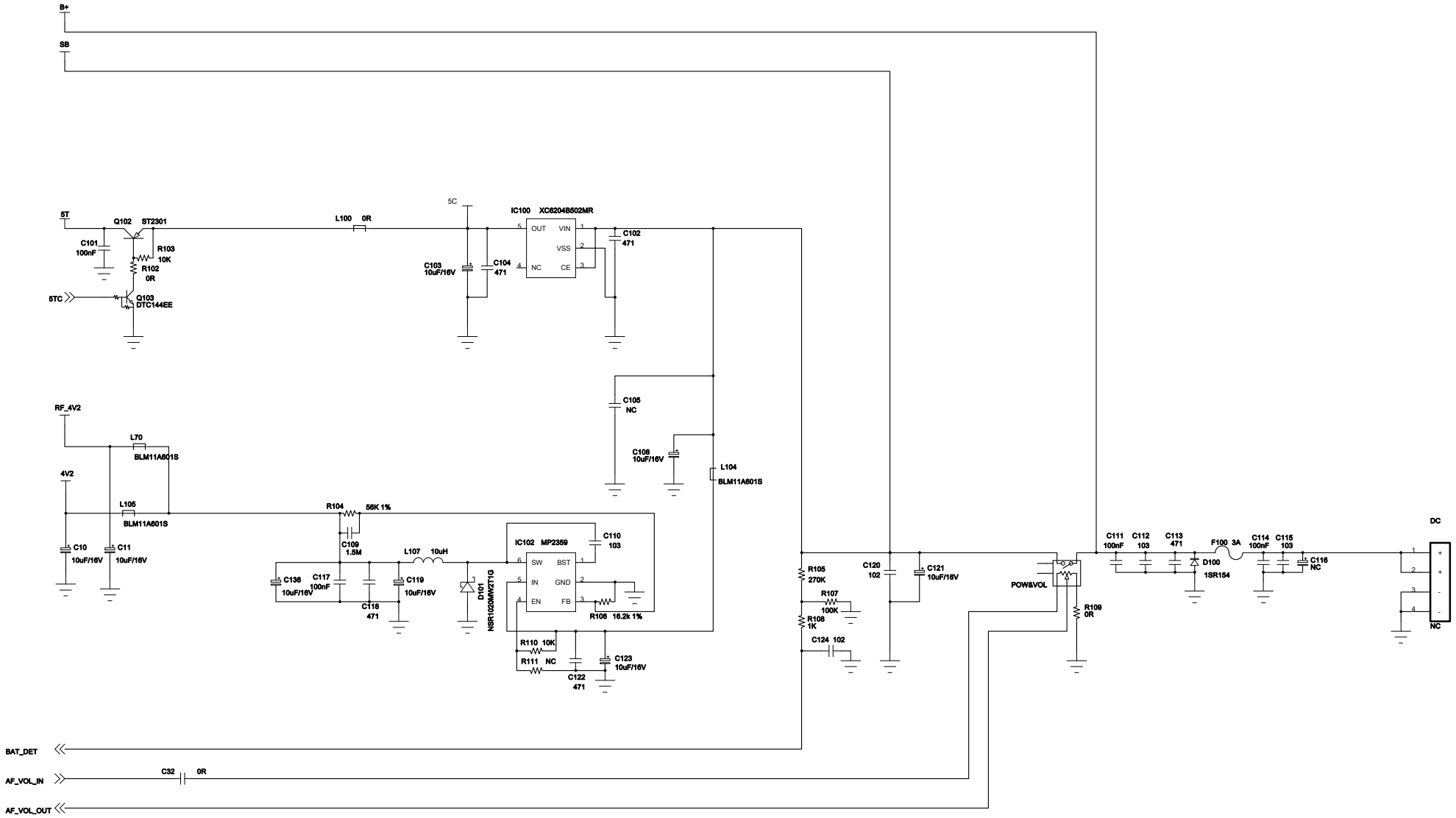

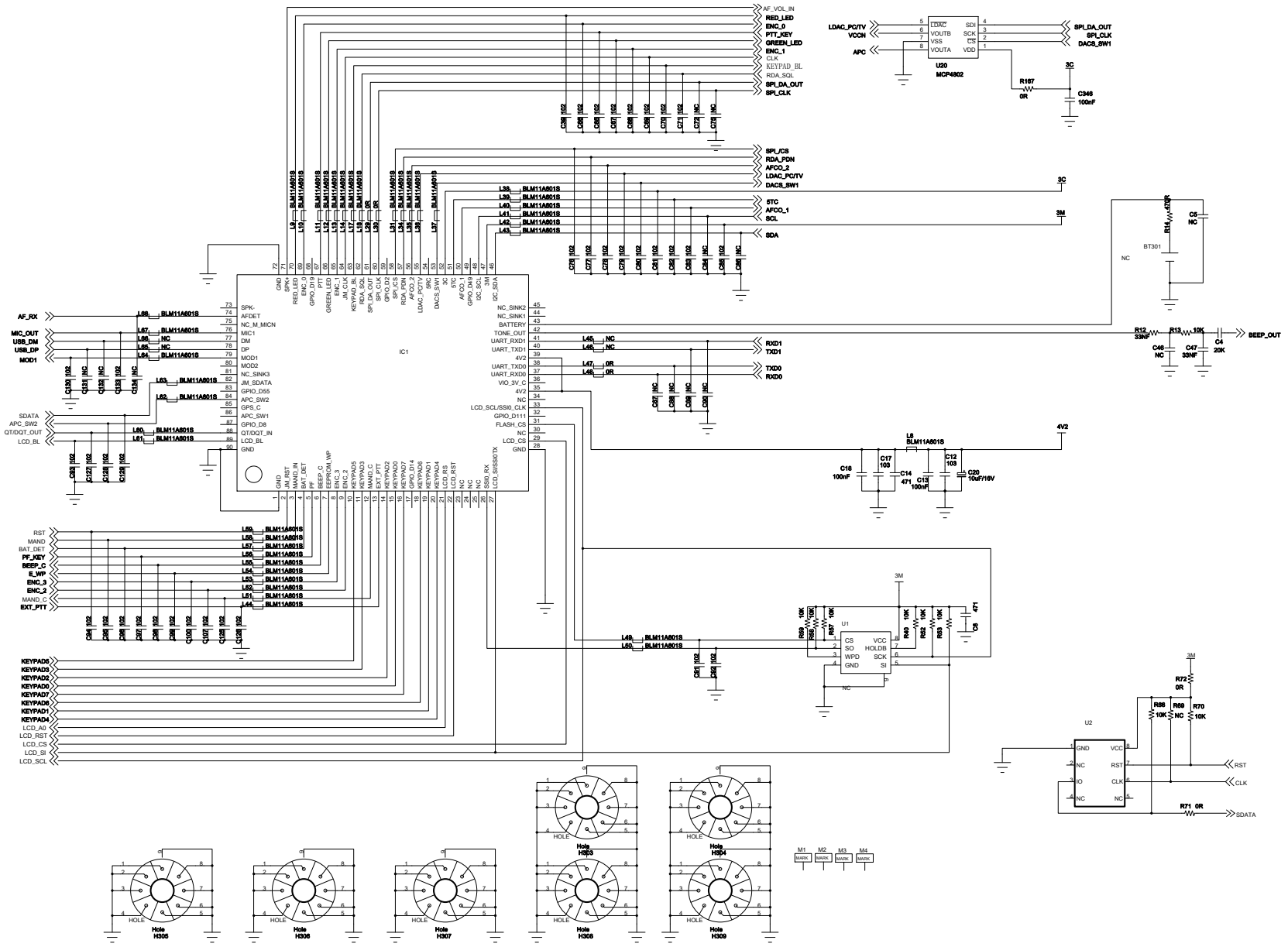
IC1
U20
MCP4902
U1
U2
BT301
BEEP_OUT
RXD1
TXD1
TXD0
RXD0
SDATA
RST
CLK
4V2
3M
3C

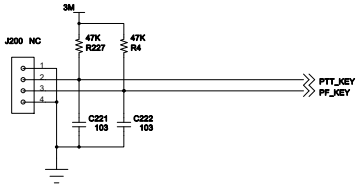
3M
J200 NC
47K R227
47K R4
PTT_KEY
PF_KEY
C221 103
C222 103

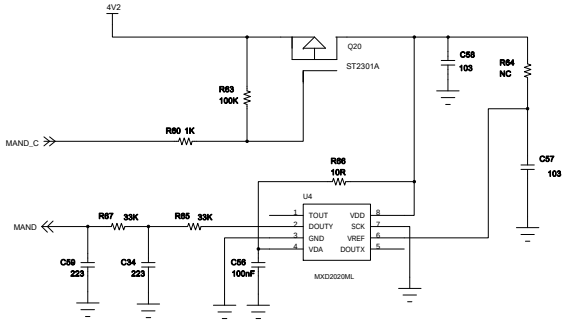
4V2
Q20
ST2301A
C58 103
R54 NC
R53 100K
MAND_C
R50 1K
C57 103
R56 10R
U4
MAND
R57 33K
R55 33K
TOUT VDD
DOUTY SCK
GND VREF
VDA DOUTX
C59 223
C34 223
C56 100nF
MXD2020ML

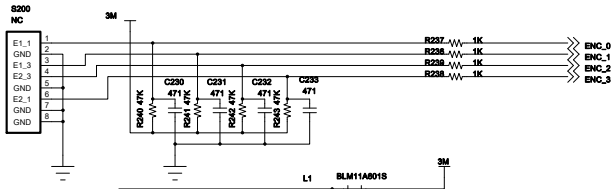
S200 NC
E1_1
GND
E1_3
E2_3
GND
E2_1
GND
GND
3M
R237 1K
R238 1K
R239 1K
R238 1K
ENC_0
ENC_1
ENC_2
ENC_3
R240 47K
C230 471
R241 47K
C231 471
R242 47K
C232 471
R243 47K
C233 471

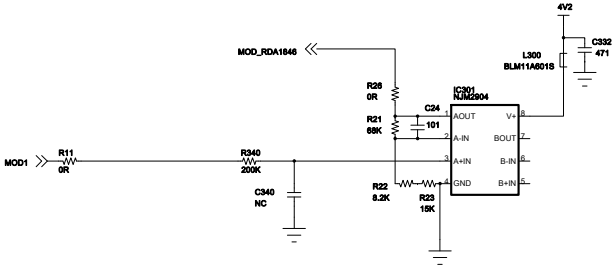
4V2
MOD_RDA1846
L300 BLM11A601S
C332 471
R26 0R
IC301 NJM2904
C24 101
R21 68K
AOUT
A-IN
A+IN
GND
V+
BOUT
B-IN
B+IN
MOD1
R11 0R
R340 200K
C340 NC
R22 9.2K
R23 15K

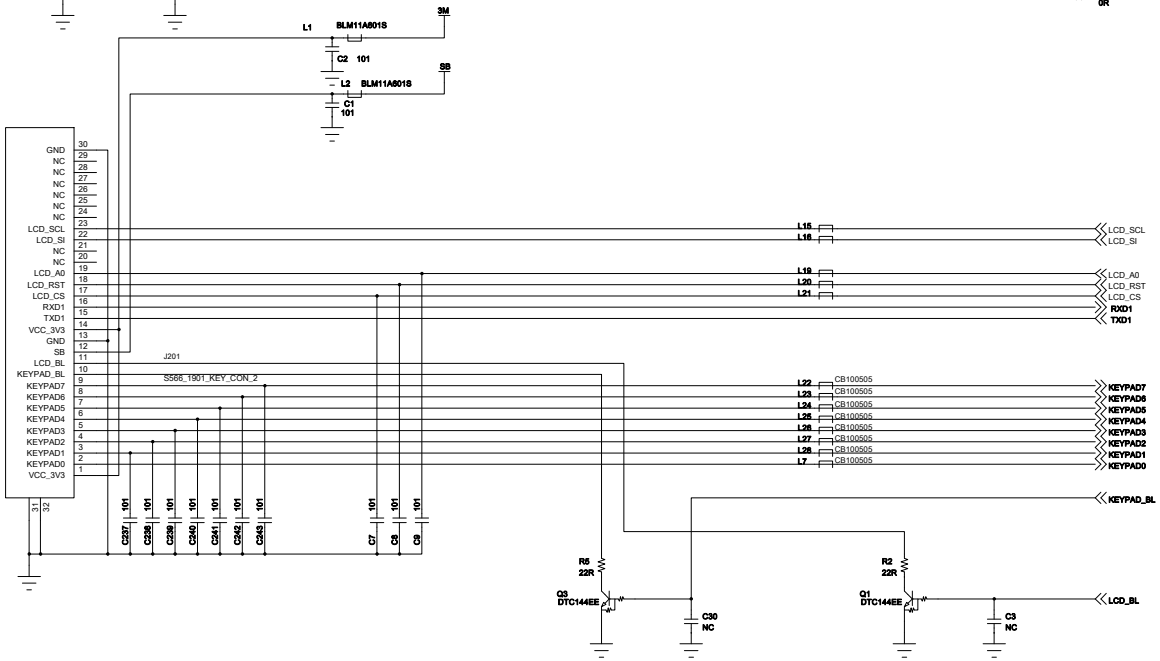
3M
L1 BLM11A601S
C2 101
L2 BLM11A601S
SB
C1 101
GND
NC
LCD_SCL
LCD_SI
LCD_A0
LCD_RST
LCD_CS
RXD1
TXD1
VCC_3V3
GND
SB
LCD_BL
KEYPAD_BL
KEYPAD7
KEYPAD6
KEYPAD5
KEYPAD4
KEYPAD3
KEYPAD2
KEYPAD1
KEYPAD0
VCC_3V3
J201
S566_1901_KEY_CON_2
CB100505
C237 101
C238 101
C239 101
C240 101
C241 101
C242 101
C243 101
C7 101
C8 101
C9 101
R5 22R
Q3 DTC144EE
C30 NC
R2 22R
Q1 DTC144EE
C3 NC
LCD_BL

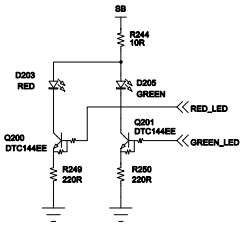
SB
R244 10R
D203 RED
D205 GREEN
RED_LED
Q201 DTC144EE
GREEN_LED
Q200 DTC144EE
R249 220R
R250 220R

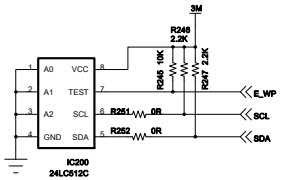
3M
R246 2.2K
R245 10K
R247 2.2K
A0 VCC
A1 TEST
A2 SCL
GND SDA
R251 0R
R252 0R
E_WP
SCL
SDA
IC200 24LC512C

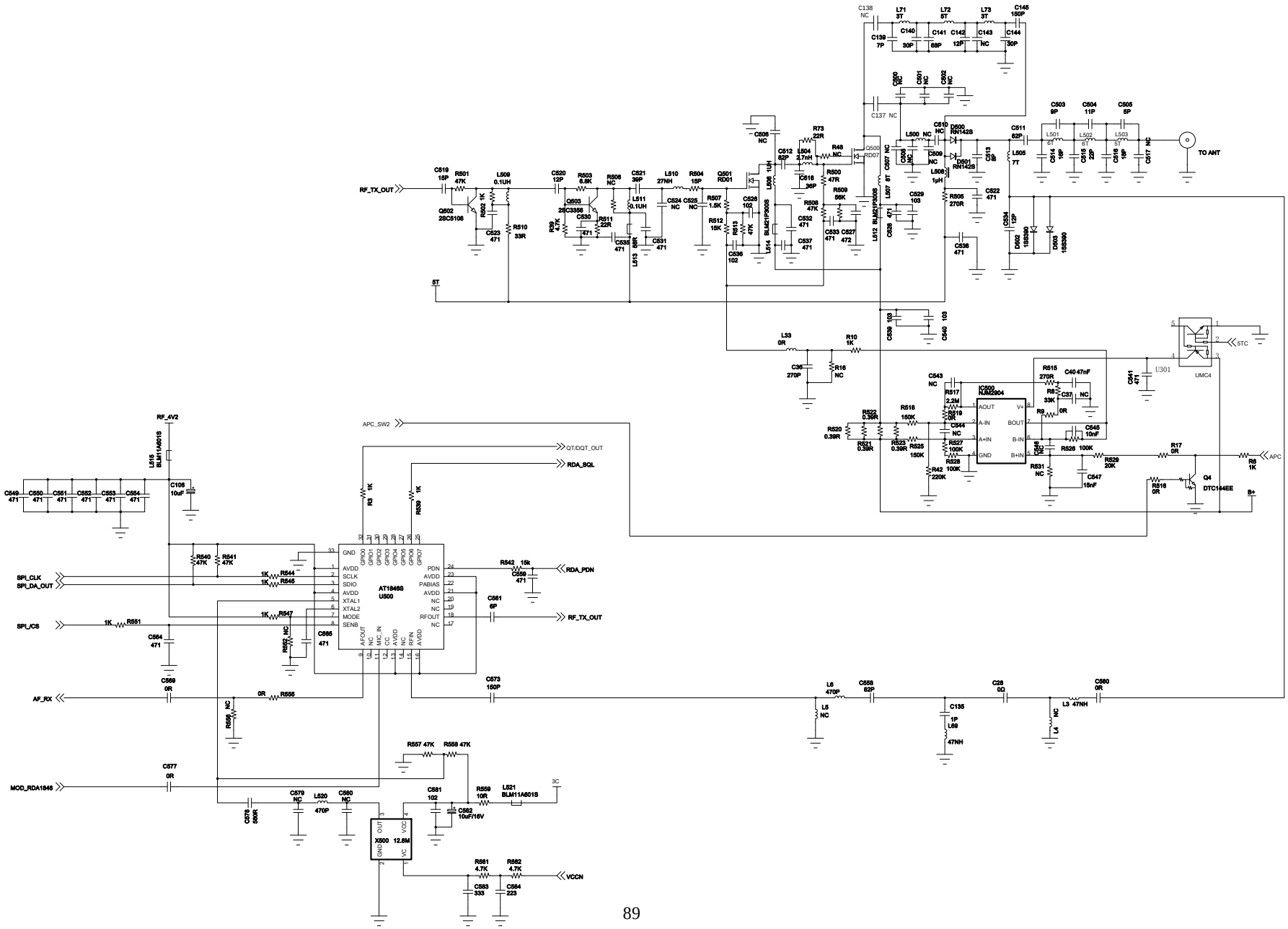
RF_TX_OUT
TO ANT
APC_SW2
QT/DQT_OUT
RDA_SQL
RDA_PDN
RF_TX_OUT
SPI_CLK
SPI_DA_OUT
SPI_CS
AF_RX
MOD_RDA1846
VCCN
APC
B+
5TC
RF_4V2
AT1846S
U500
X500 12.8M
Q502 2SC5108
Q503 2SC3356
Q500 RD07
Q501 RD01
Q4 DTC144EE
IC500 NJM2904
U301
UMC4

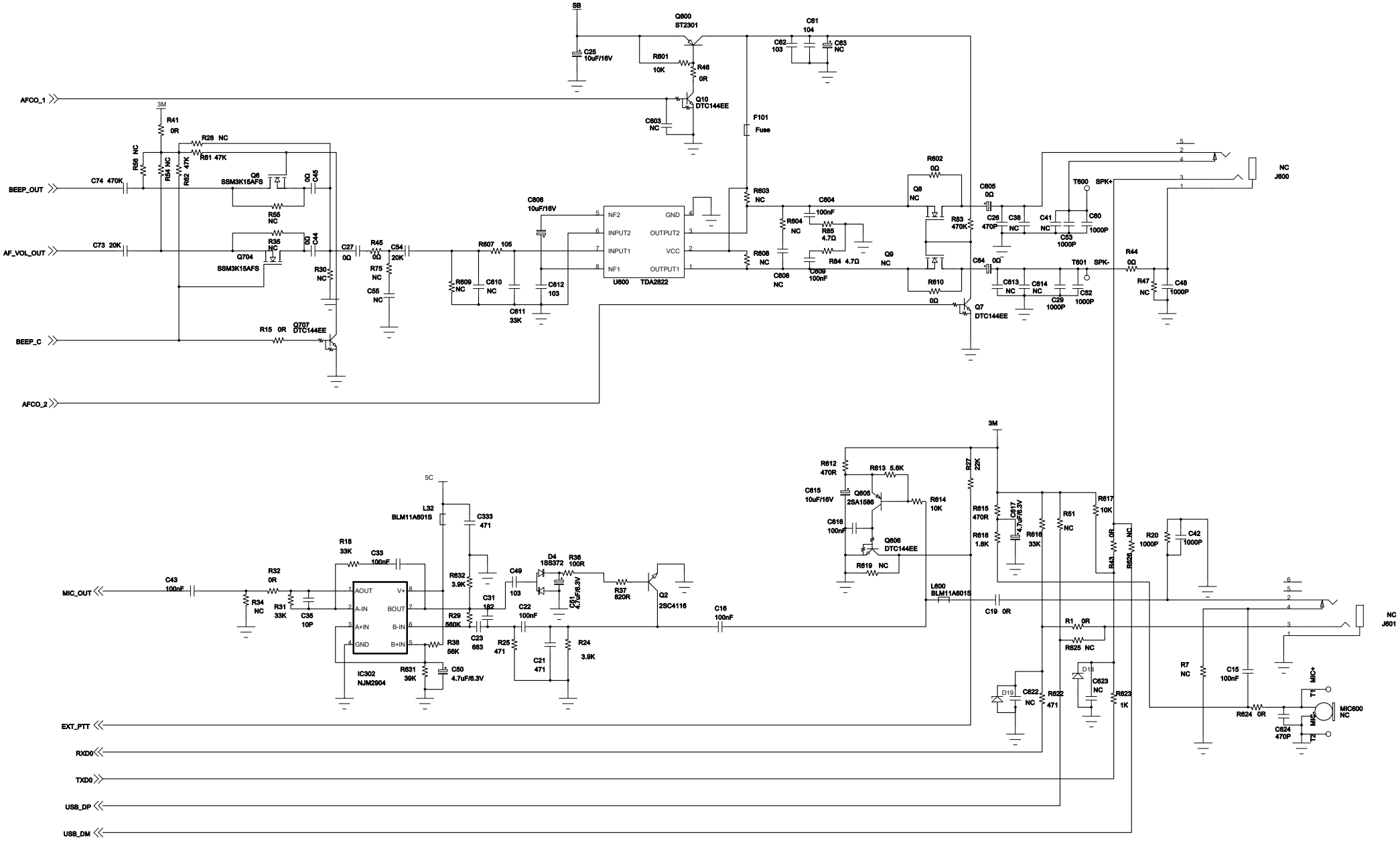
AFCO_1
BEEP_OUT
AF_VOL_OUT
BEEP_C
AFCO_2
MIC_OUT
EXT_PTT
RXD0
TXD0
USB_DP
USB_DM
SB
3M
5C
Q600 ST2301
C25 10uF/16V
R601 10K
R46 0R
Q10 DTC144EE
C603 NC
C61 104
C62 103
C63 NC
F101 Fuse
R41 0R
R28 NC
R61 47K
R56 NC
R54 NC
R62 47K
Q6 SSM3K15AFS
C45 0Ω
C74 470K
R55 NC
R35 NC
C44 0Ω
C73 20K
Q704 SSM3K15AFS
R30 NC
Q707 DTC144EE
R15 0R
C27 0Ω
R45 0Ω
C54 20K
R75 NC
C55 NC
R607 105
R609 NC
C610 NC
C611 33K
C606 10uF/16V
C612 103
NF2
INPUT2
INPUT1
NF1
GND
OUTPUT2
VCC
OUTPUT1
U600 TDA2822
R603 NC
R604 NC
C604 100nF
R85 4.7Ω
R84 4.7Ω
R608 NC
C608 NC
C609 100nF
Q9 NC
R602 0Ω
Q8 NC
R83 470K
R610 0Ω
Q7 DTC144EE
C605 0Ω
C26 470P
C38 NC
C64 0Ω
C613 NC
C614 NC
C29 1000P
C52 1000P
T600 SPK+
T601 SPK-
C41 NC
C53 1000P
C60 1000P
R44 0Ω
R47 NC
C48 1000P
NC J600
L32 BLM11A601S
C333 471
R18 33K
C33 100nF
R32 0R
R34 NC
R31 33K
C35 10P
C43 100nF
IC302 NJM2904
AOUT
A-IN
A+IN
GND
V+
BOUT
B-IN
B+IN
R632 3.9K
R29 560K
R38 56K
R631 39K
C50 4.7uF/6.3V
C31 182
C23 683
C49 103
D4 1SS372
R36 100R
C51 4.7uF/6.3V
R37 820R
Q2 2SC4116
C22 100nF
R25 471
C21 471
R24 3.9K
C16 100nF
R612 470R
R613 5.6K
C615 10uF/16V
Q605 2SA1586
R614 10K
C616 100nF
Q606 DTC144EE
R619 NC
R27 22K
R615 470R
R618 1.8K
C617 4.7uF/6.3V
R616 33K
R51 NC
R617 10K
R43 0R
R626 NC
R20 1000P
C42 1000P
L600 BLM11A601S
C19 0R
R1 0R
R625 NC
D18
C623 NC
R623 1K
D19
C622 NC
R622 471
R7 NC
C15 100nF
R624 0R
C624 470P
MIC+
MIC-
T1
T2
MIC600 NC
NC J601

Diagram 4 DP405-01 Motherbaord Postion Mark (6PM7-4169-HMF)

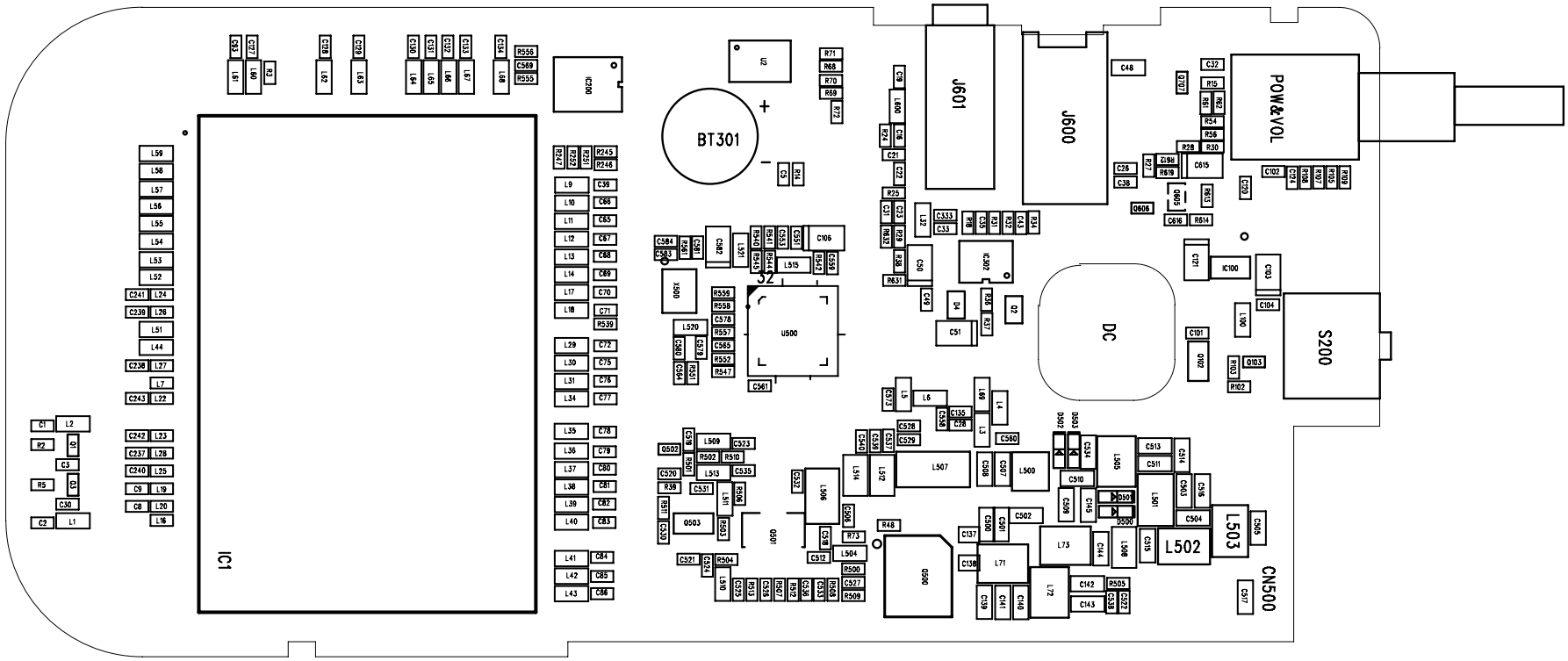

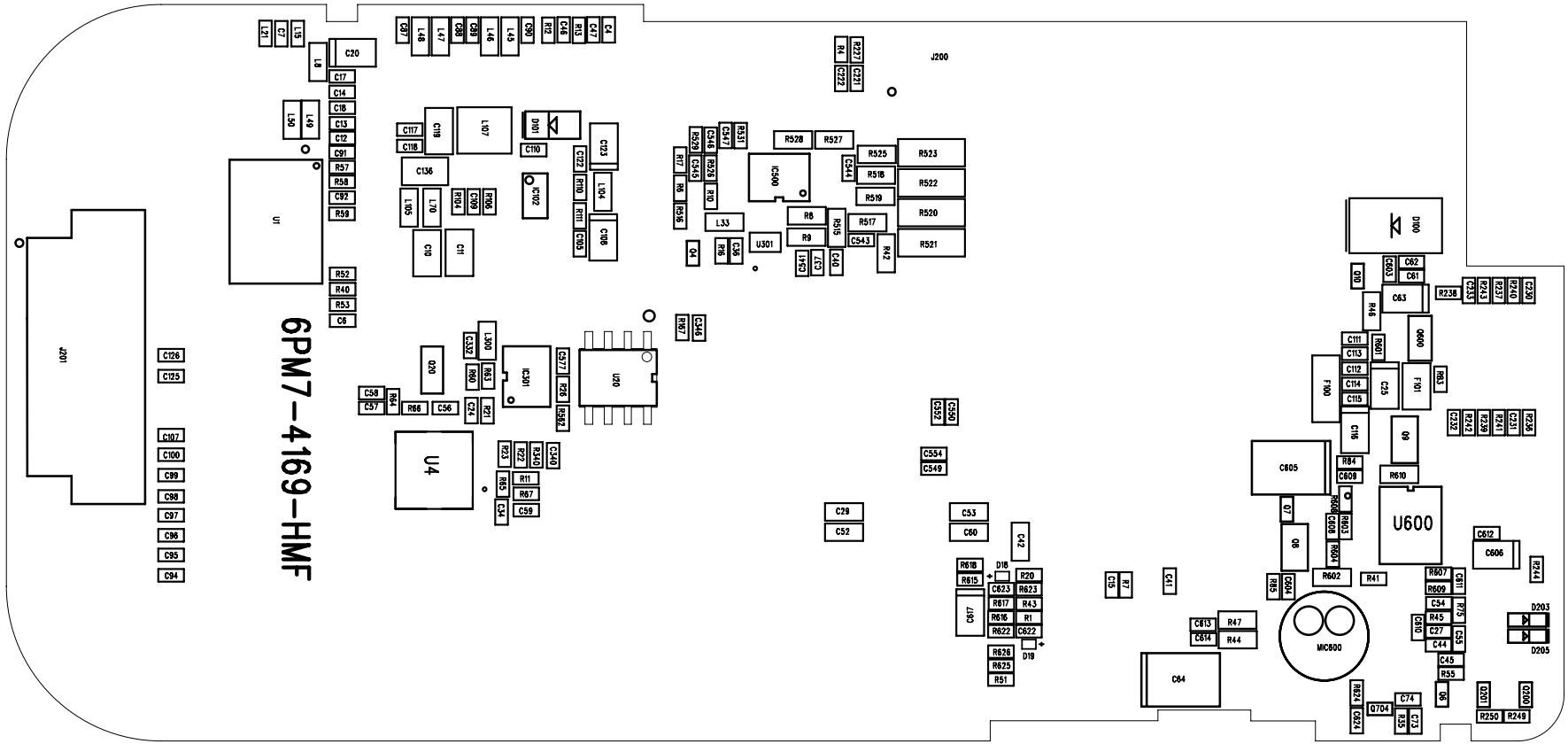
6PM7-4169-HMF
J200
J201
U1
U4
U20
U300
U301
U500
U600
IC301
MIC600
D100
D203
D205

Diagram 5 Module Schematic Diagram (6PM7-4320-HBA)

AVDD_PLL FOR ANALOG PLL
CVDD_PLL FOR DIGITAL PLL
AVDD_USB FOR ANALOG USB
CVDD_USB FOR DIGITAL USB
CVDD0 FOR CORE
CVDD1 FOR COMACC
PVDD1 FOR MEMCTL1 IO
PVDD2 FOR MEMCTL0 IO
PVDD3 FOR DIGIF IO
PVDD4 FOR TDIF IO
PVDD5 FOR UART/SSI/I2S/I2C/CPR
GPIO/JTAG/PWM
PVDD6 FOR SDMMCIO
PVDD8 FOR SIM0 IO
PVDD9 FOR SIM1 IO
PVDD10 FOR CAMIF IO
PVDD11 FOR NANDFLASH IO

GPIO属性

GPIO0A[0:31]	ARM/INT
GPIO0B[63:32]	DSP
GPIO1A[95:72]	DSP/INT
GPIO1B[103:96]	ARM
GPIO1C[113:104]	ARM

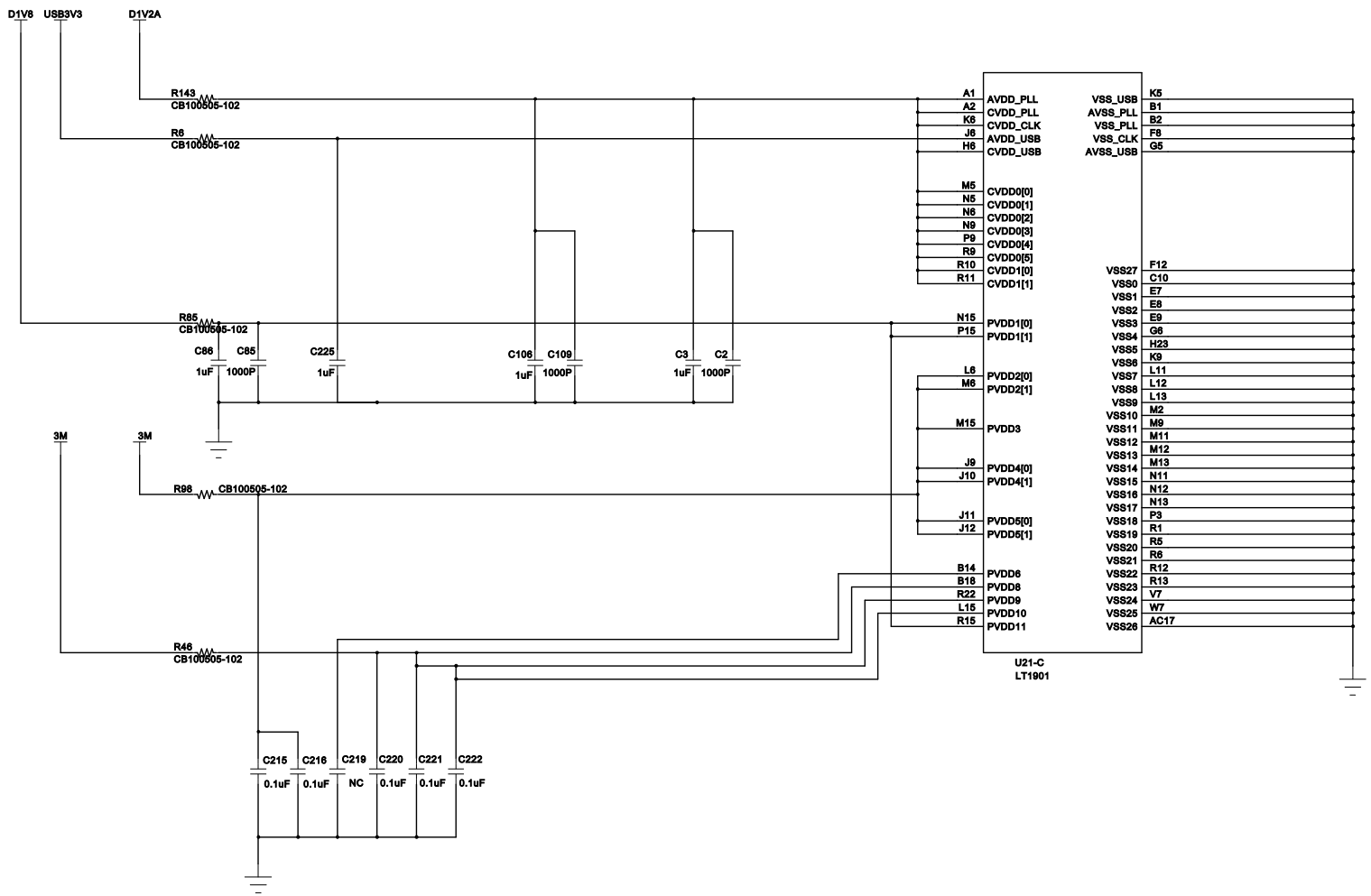

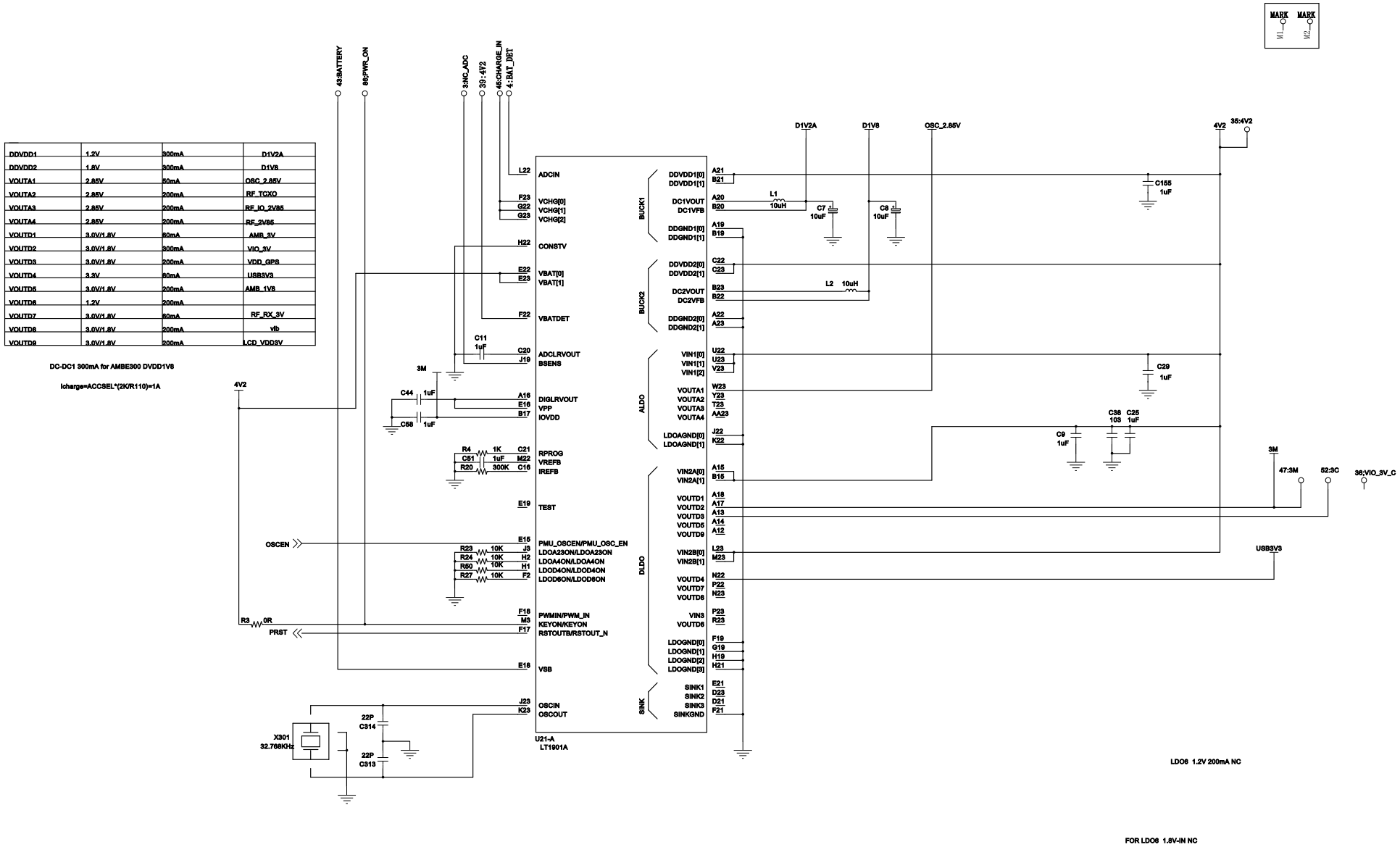
MARK
MARK
M1
M2
43:BATTERY
86:PWR_ON
3:NC_ADC
35:4V2
46:CHARGE_IN
4:BAT_DET
D1V2A
D1V8
OSC_2.85V
4V2
35:4V2
DDVDD1 1.2V 300mA D1V2A
DDVDD2 1.8V 300mA D1V8
VOUTA1 2.85V 50mA OSC_2.85V
VOUTA2 2.85V 200mA RF_TCXO
VOUTA3 2.85V 200mA RF_IO_2V85
VOUTA4 2.85V 200mA RF_2V85
VOUTD1 3.0V/1.8V 80mA AMB_3V
VOUTD2 3.0V/1.8V 300mA VIO_3V
VOUTD3 3.0V/1.8V 200mA VDD_GPS
VOUTD4 3.3V 80mA USB3V3
VOUTD5 3.0V/1.8V 200mA AMB_1V8
VOUTD6 1.2V 200mA
VOUTD7 3.0V/1.8V 80mA RF_RX_3V
VOUTD8 3.0V/1.8V 200mA vib
VOUTD9 3.0V/1.8V 200mA LCD_VDD3V
DC-DC1 300mA for AMBE300 DVDD1V8
Icharge=ACCSEL*(2K/R110)=1A
ADCIN
VCHG[0]
VCHG[1]
VCHG[2]
CONSTV
VBAT[0]
VBAT[1]
VBATDET
ADCLRVOUT
BSENS
DIGLRVOUT
VPP
IOVDD
RPROG
VREFB
IREFB
TEST
PMU_OSCEN/PMU_OSC_EN
LDOA23ON/LDOA23ON
LDOA4ON/LDOA4ON
LDOD4ON/LDOD4ON
LDOD6ON/LDOD6ON
PWMIN/PWM_IN
KEYON/KEYON
RSTOUTB/RSTOUT_N
VSB
OSCIN
OSCOUT
U21-A
LT1901A
BUCK1
BUCK2
ALDO
DLDO
SINK
DDVDD1[0]
DDVDD1[1]
DC1VOUT
DC1VFB
DDGND1[0]
DDGND1[1]
DDVDD2[0]
DDVDD2[1]
DC2VOUT
DC2VFB
DDGND2[0]
DDGND2[1]
VIN1[0]
VIN1[1]
VIN1[2]
VOUTA1
VOUTA2
VOUTA3
VOUTA4
LDOAGND[0]
LDOAGND[1]
VIN2A[0]
VIN2A[1]
VOUTD1
VOUTD2
VOUTD3
VOUTD5
VOUTD9
VIN2B[0]
VIN2B[1]
VOUTD4
VOUTD7
VOUTD8
VIN3
VOUTD6
LDOGND[0]
LDOGND[1]
LDOGND[2]
LDOGND[3]
SINK1
SINK2
SINK3
SINKGND
L1 10uH
L2 10uH
C7 10uF
C8 10uF
C155 1uF
C29 1uF
C9 1uF
C36 10S
C25 1uF
3M
47:3M
52:3C
36:VIO_3V_C
USB3V3
LDO6 1.2V 200mA NC
FOR LDO6 1.8V-IN NC
C11 1uF
C44 1uF
C58 1uF
R4 1K
C51 1uF
R20 300K
R23 10K
R24 10K
R50 10K
R27 10K
OSCEN
R3 0R
PRST
X301
32.768KHz
22P C314
22P C313

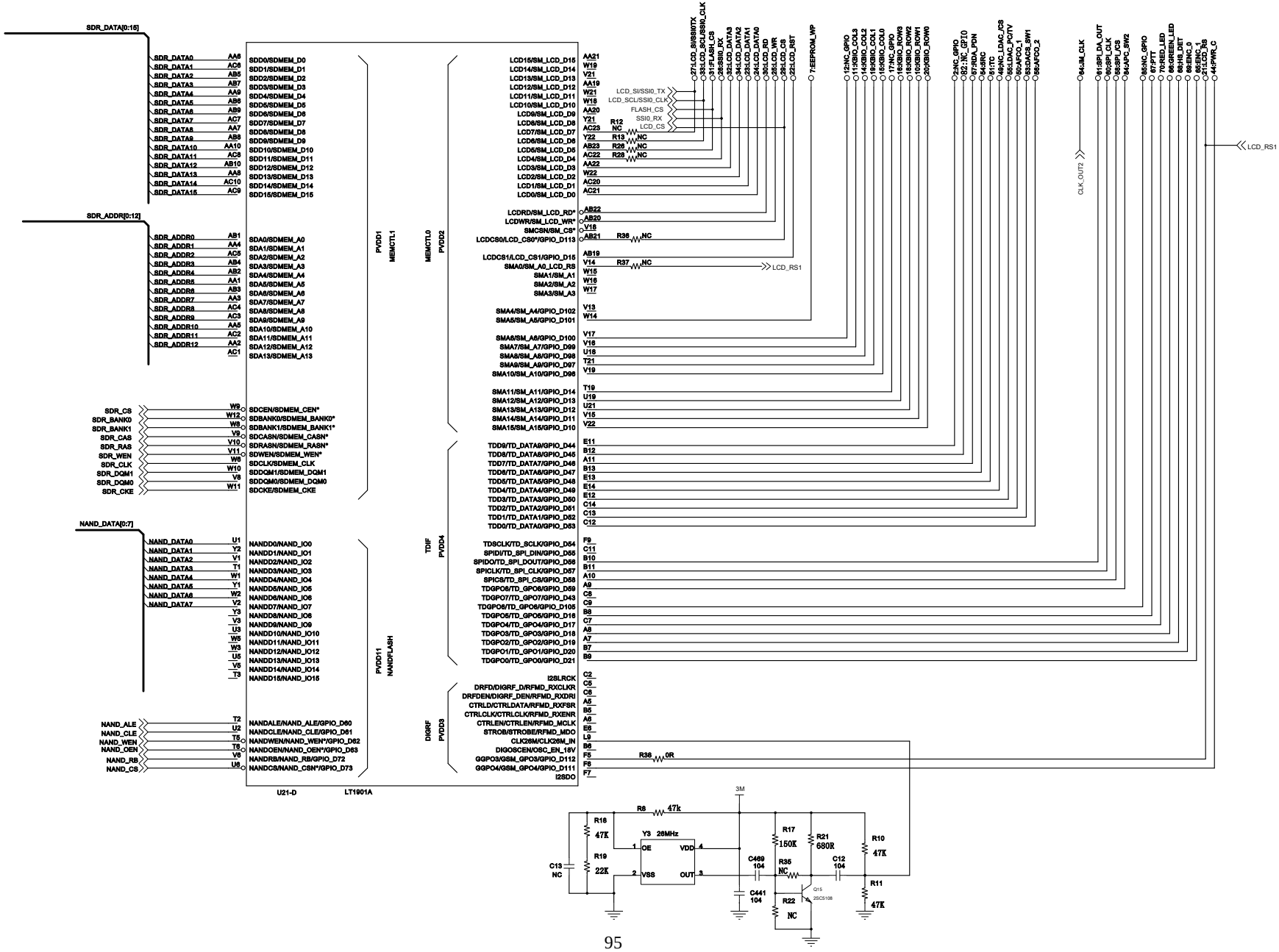
SDR_DATA[0:15]
SDR_ADDR[0:12]
NAND_DATA[0:7]
SDR_CS
SDR_BANK0
SDR_BANK1
SDR_CAS
SDR_RAS
SDR_WEN
SDR_CLK
SDR_DQM1
SDR_DQM0
SDR_CKE
NAND_ALE
NAND_CLE
NAND_WEN
NAND_OEN
NAND_RB
NAND_CS
U21-D
LT1901A
PVDD1
MEMCTL1
MEMCTL0
PVDD2
TDIF
PVDD4
PVDD11
NANDFLASH
DIGRF
PVDD3
LCD_SI/SSI0_TX
LCD_SCL/SSI0_CLK
FLASH_CS
SSI0_RX
LCD_CS
LCD_RS1
CLK_OUT2
R38 0R
Y3 26MHz
R8 47k
R16 47K
R19 22K
C13 NC
R17 150K
R21 680R
R10 47K
R11 47K
R35 NC
R22 NC
C489 104
C441 104
C12 104
Q15 2SC5108
3M

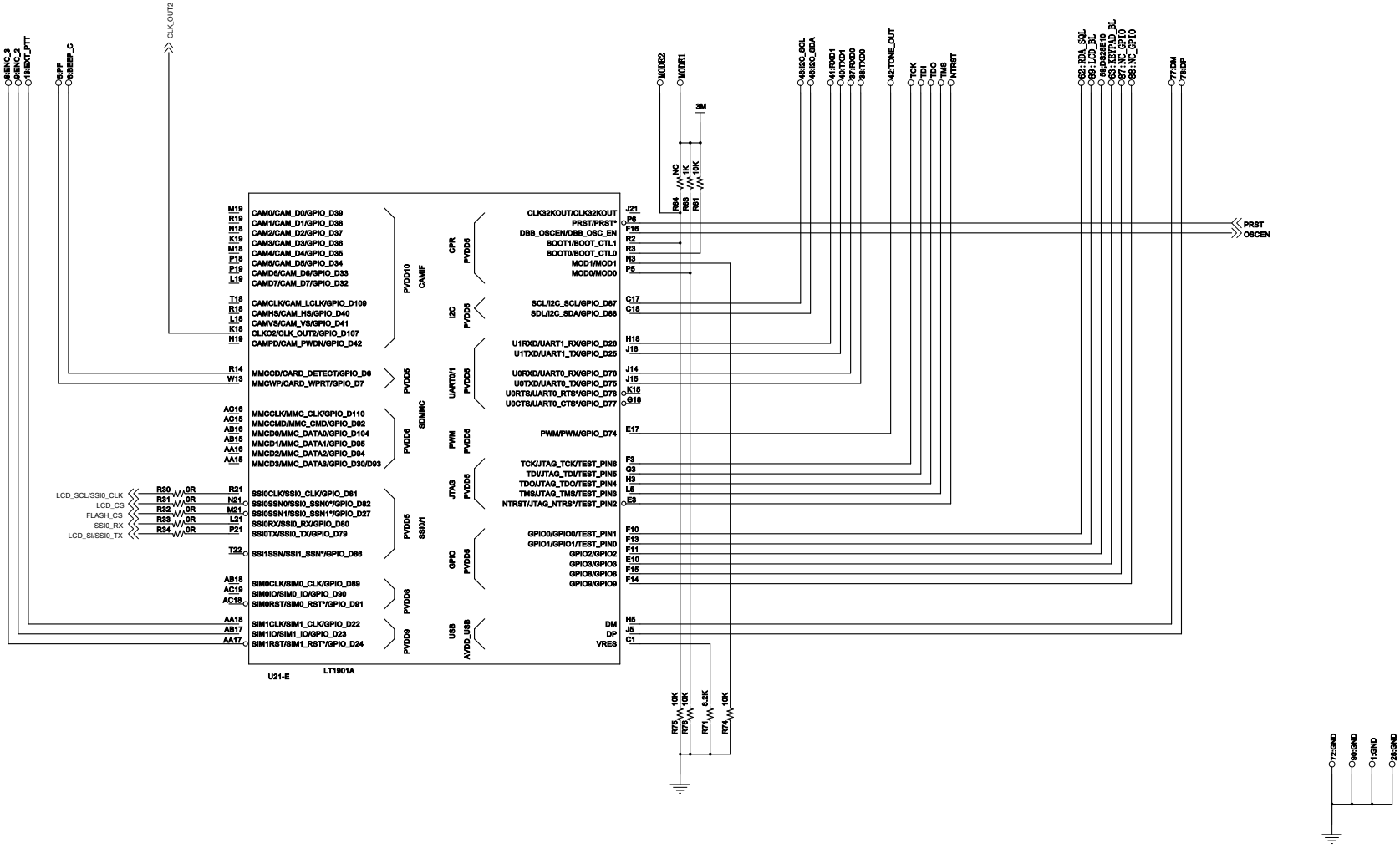

GPIO属性

GPIO0A[31:0]	ARM/INT
GPIO0B[63:32]	DSP
GPIO1A[95:72]	DSP/INT
GPIO1B[103:96]	ARM
GPIO1C[113:104]	DSP

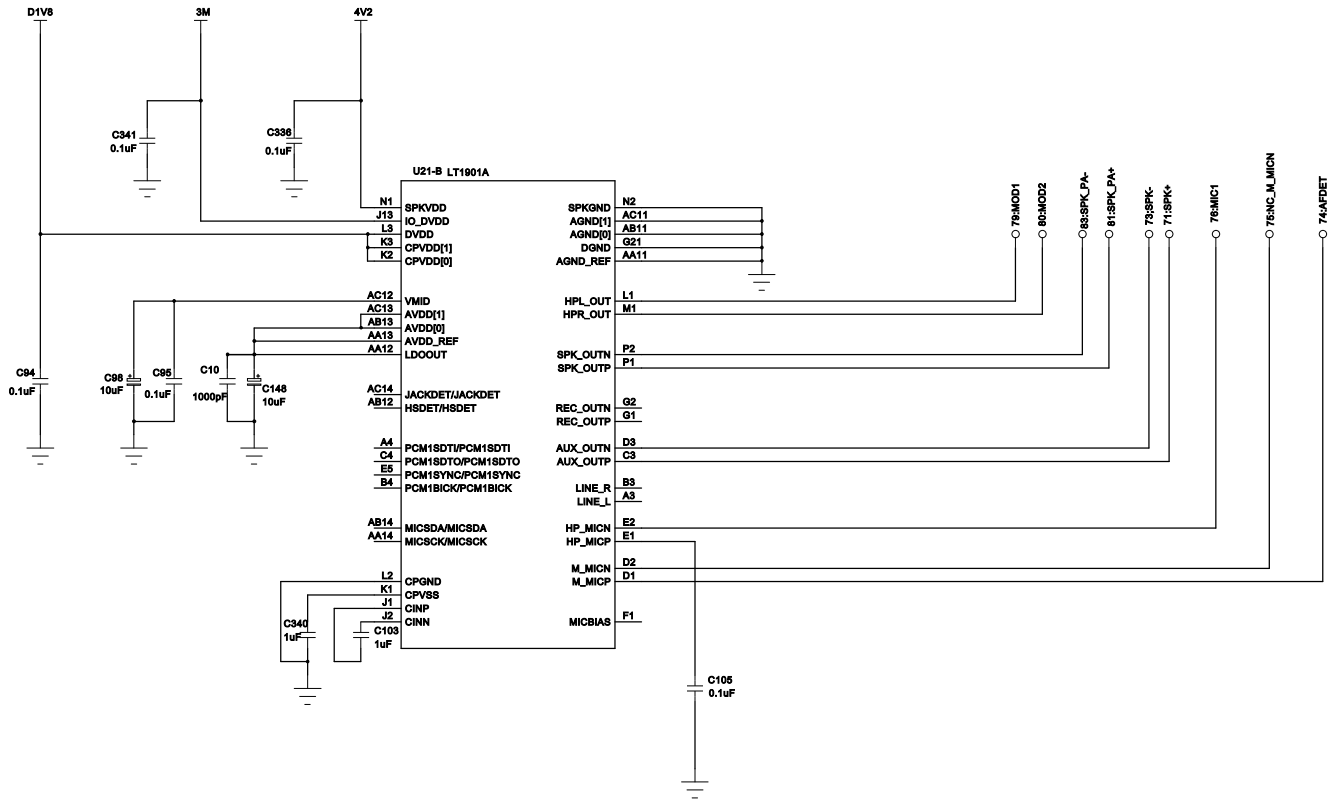
D1V8
3M
4V2
C341
0.1uF
C336
0.1uF
U21-B LT1901A
N1 SPKVDD
J13 IO_DVDD
L3 DVDD
K3 CPVDD[1]
K2 CPVDD[0]
AC12 VMID
AC13 AVDD[1]
AB13 AVDD[0]
AA13 AVDD_REF
AA12 LDOOUT
AC14 JACKDET/JACKDET
AB12 HSDET/HSDET
A4 PCM1SDTI/PCM1SDTI
C4 PCM1SDTO/PCM1SDTO
E5 PCM1SYNC/PCM1SYNC
B4 PCM1BICK/PCM1BICK
AB14 MICSDA/MICSDA
AA14 MICSCK/MICSCK
L2 CPGND
K1 CPVSS
J1 CINP
J2 CINN
SPKGND N2
AGND[1] AC11
AGND[0] AB11
DGND G21
AGND_REF AA11
HPL_OUT L1
HPR_OUT M1
SPK_OUTN P2
SPK_OUTP P1
REC_OUTN G2
REC_OUTP G1
AUX_OUTN D3
AUX_OUTP C3
LINE_R B3
LINE_L A3
HP_MICN E2
HP_MICP E1
M_MICN D2
M_MICP D1
MICBIAS F1
C94
0.1uF
C98
10uF
C95
0.1uF
C10
1000pF
C148
10uF
C340
1uF
C103
1uF
C105
0.1uF
79:MOD1
80:MOD2
83:SPK_PA-
81:SPK_PA+
73:SPK-
71:SPK+
76:MIC1
75:NC_M_MICN
74:AFDET

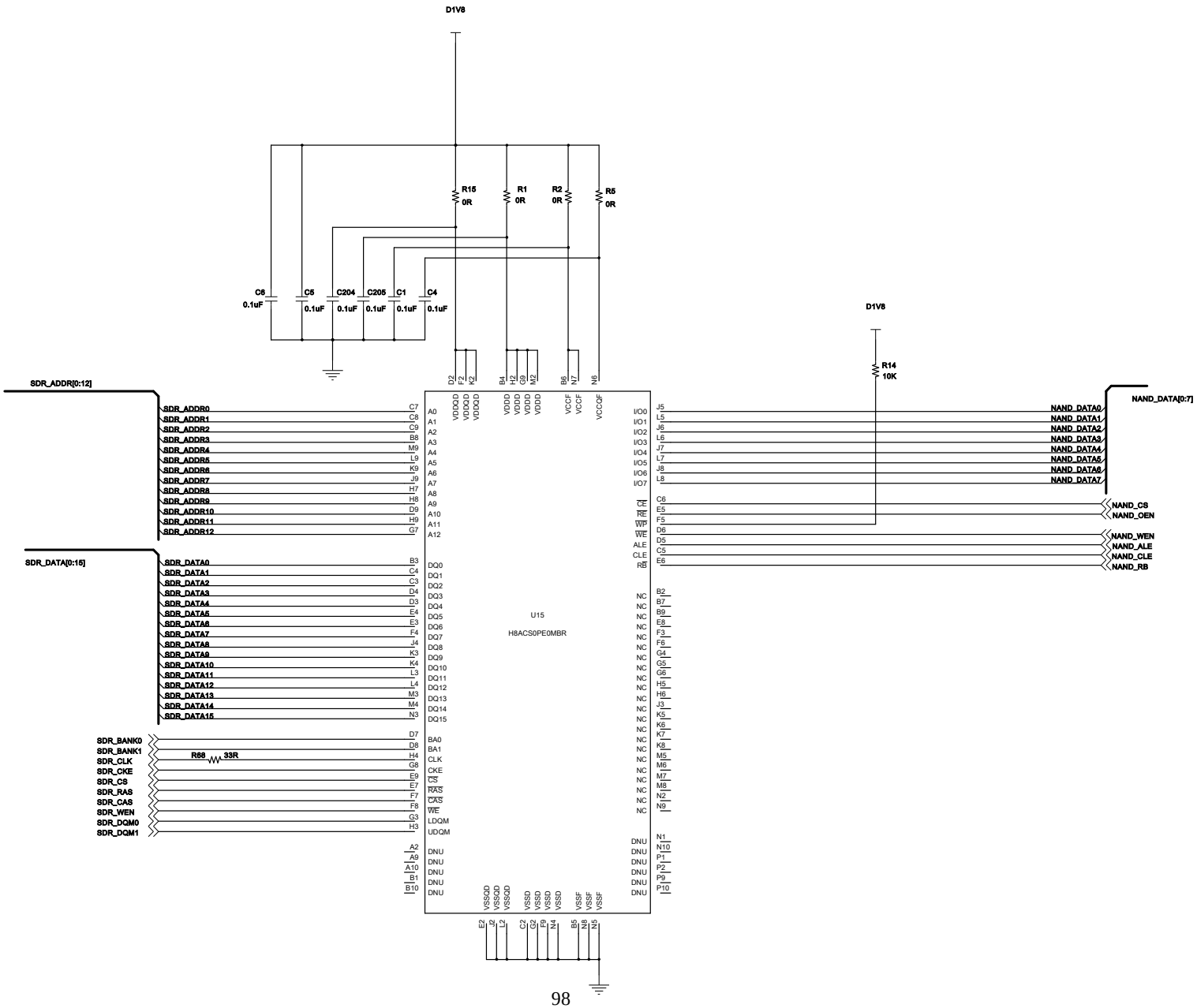
D1V8
R15 0R
R1 0R
R2 0R
R5 0R
C6 0.1uF
C5 0.1uF
C204 0.1uF
C205 0.1uF
C1 0.1uF
C4 0.1uF
D1V8
R14 10K
SDR_ADDR[0:12]
SDR_DATA[0:15]
SDR_BANK0
SDR_BANK1
SDR_CLK
SDR_CKE
SDR_CS
SDR_RAS
SDR_CAS
SDR_WEN
SDR_DQM0
SDR_DQM1
R88 33R
U15
H8ACS0PE0MBR
NAND_DATA[0:7]
NAND_CS
NAND_OEN
NAND_WEN
NAND_ALE
NAND_CLE
NAND_RB

Diagram 6 Module Postion Mark (6PM7-4320-HBA)