Broîl Kîng®

Baron S340
9215-62
9215-63

Baron 340
9219-62
9219-63

Baron S320
9215-52
9215-53

Baron 320
9219-52
9219-53

Onward Manufacturing Company
Since 1906
1000 East Market Street
Huntington, Indiana, 46750, USA

50084-S38EU Rev B 06/17

HARDWARE INCLUDED

Y-12865	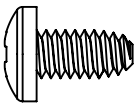	x12	Y-12310	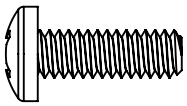	x16	S21125	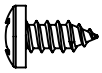	x12
Y-29304	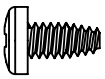	x2	S21235	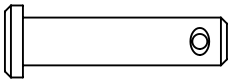	x2	S21233	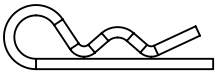	x2
Y-12857	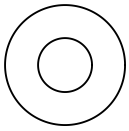	x2	Y-11551	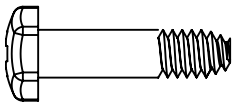	x1	Y-12124	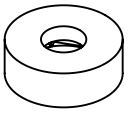	x1
S35094	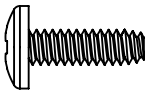	x1	20005-000	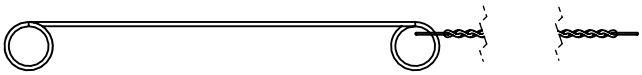				x1
Y-11793	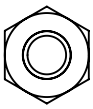	x4						

TOOLS REQUIRED

Y-31223

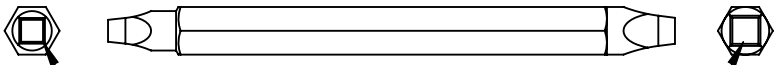

Robertson #2 Robertson #3

7/16"

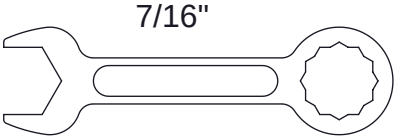

1	(8) 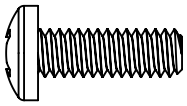

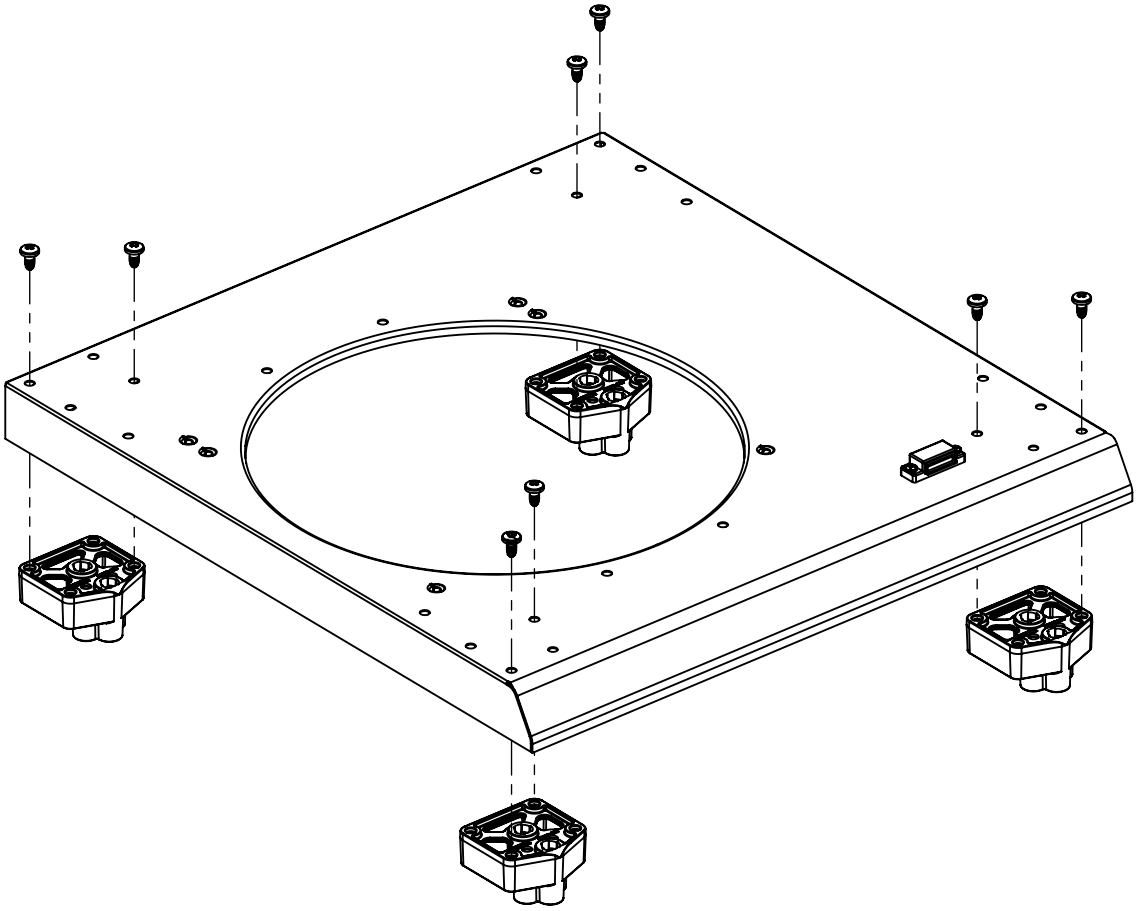

2	(4) 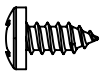

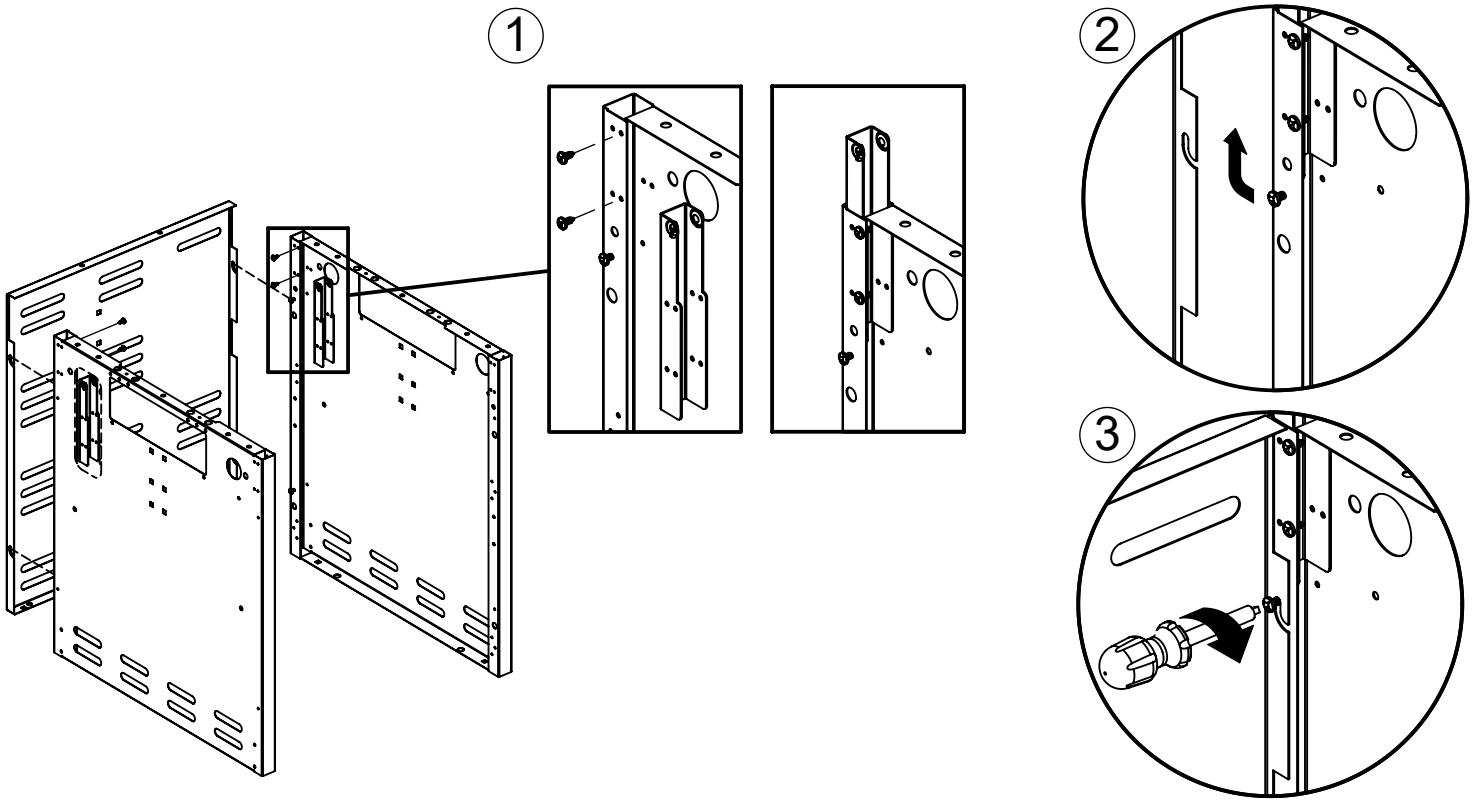

3	(6) 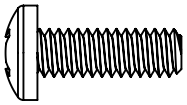

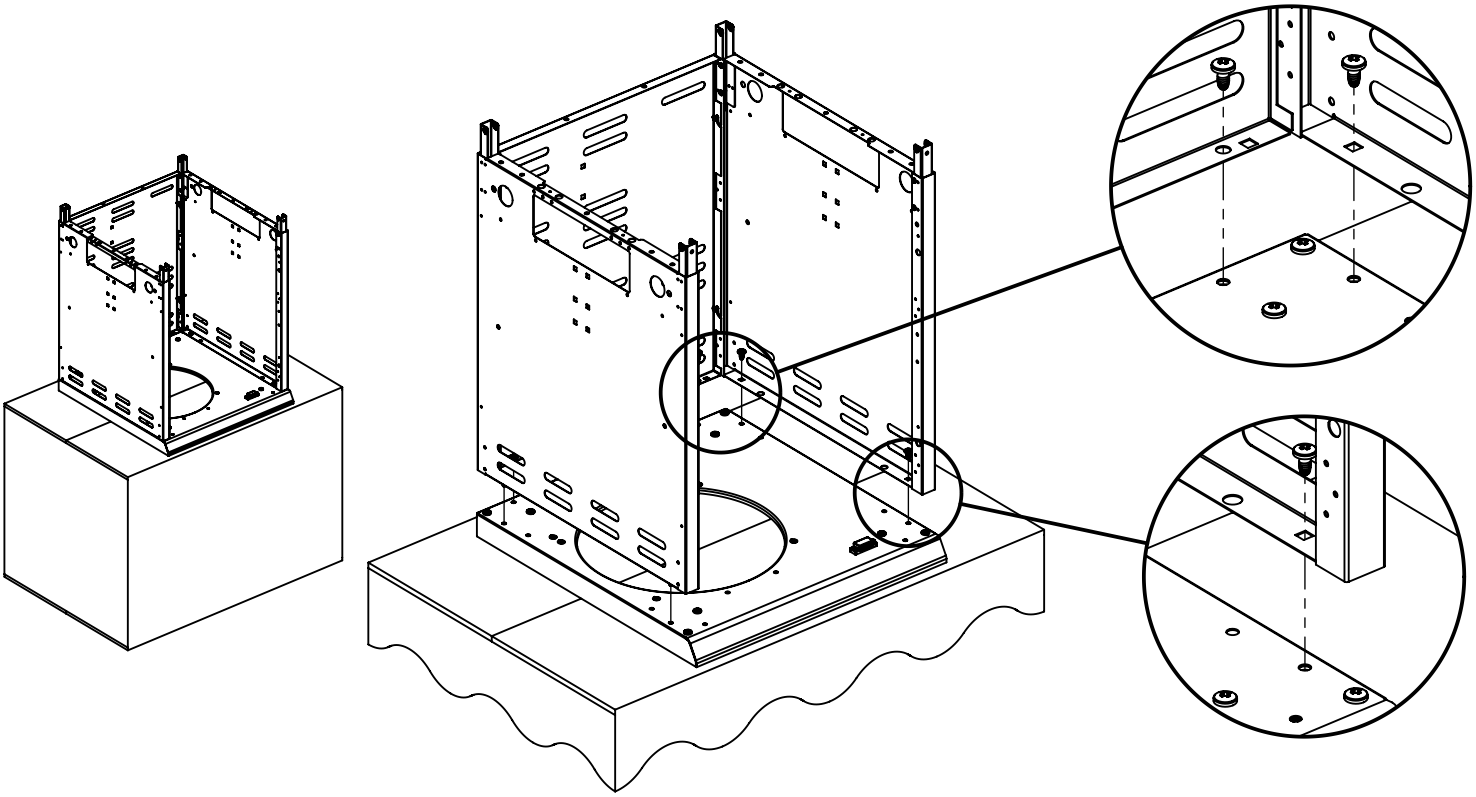

4	(4)

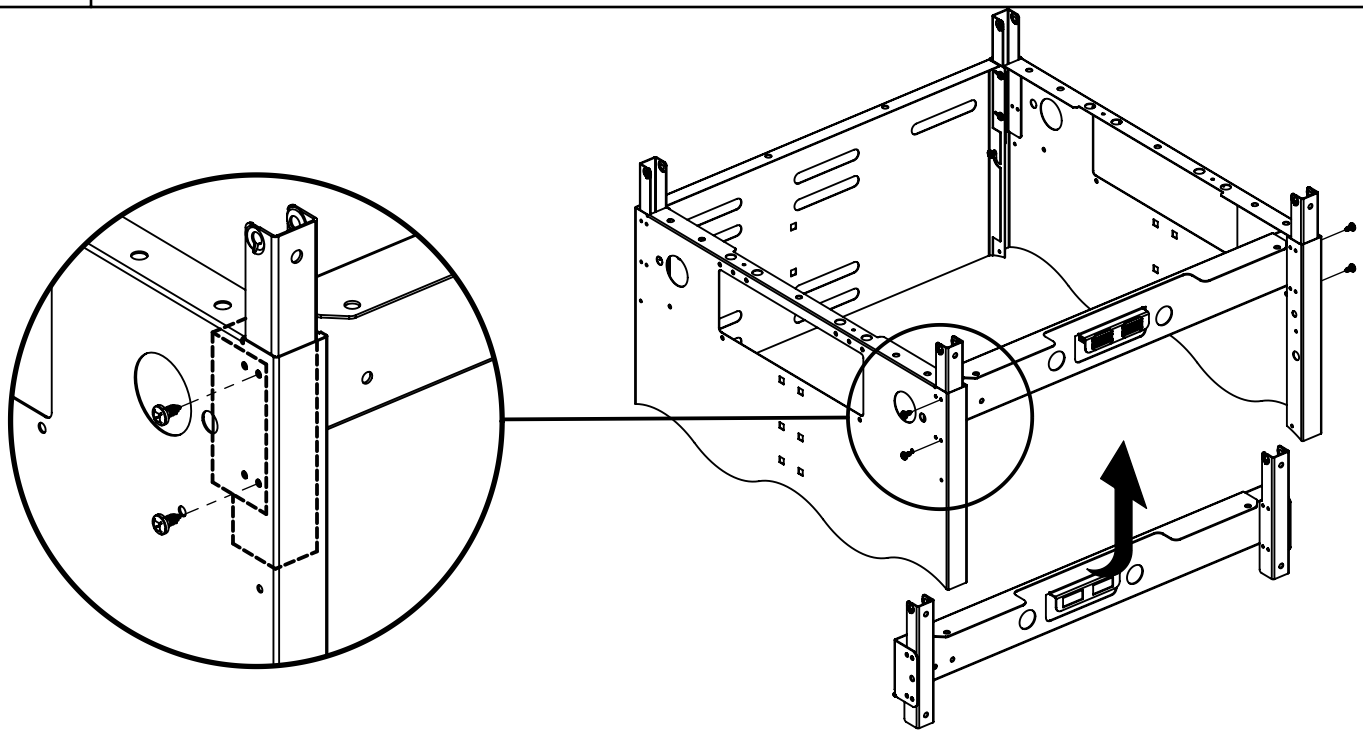

5	(4) (1)

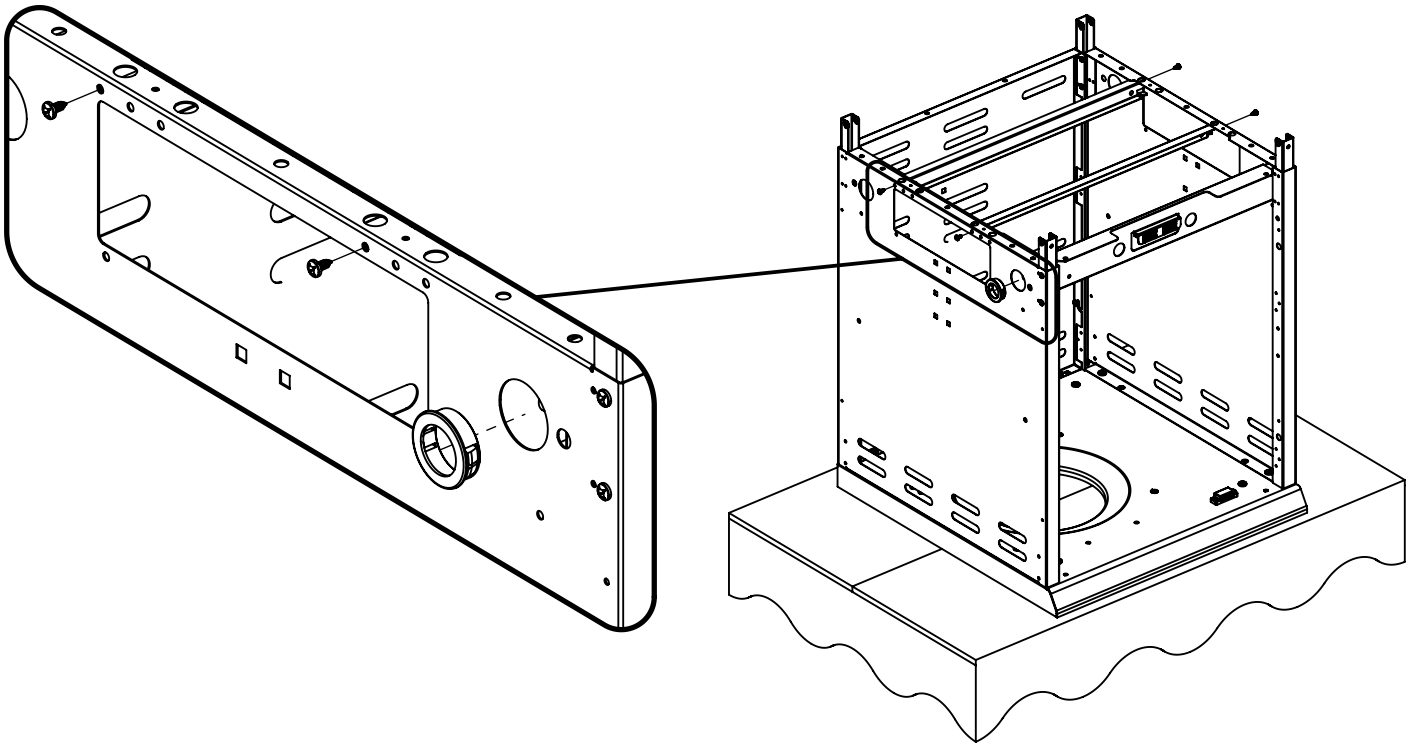

6	

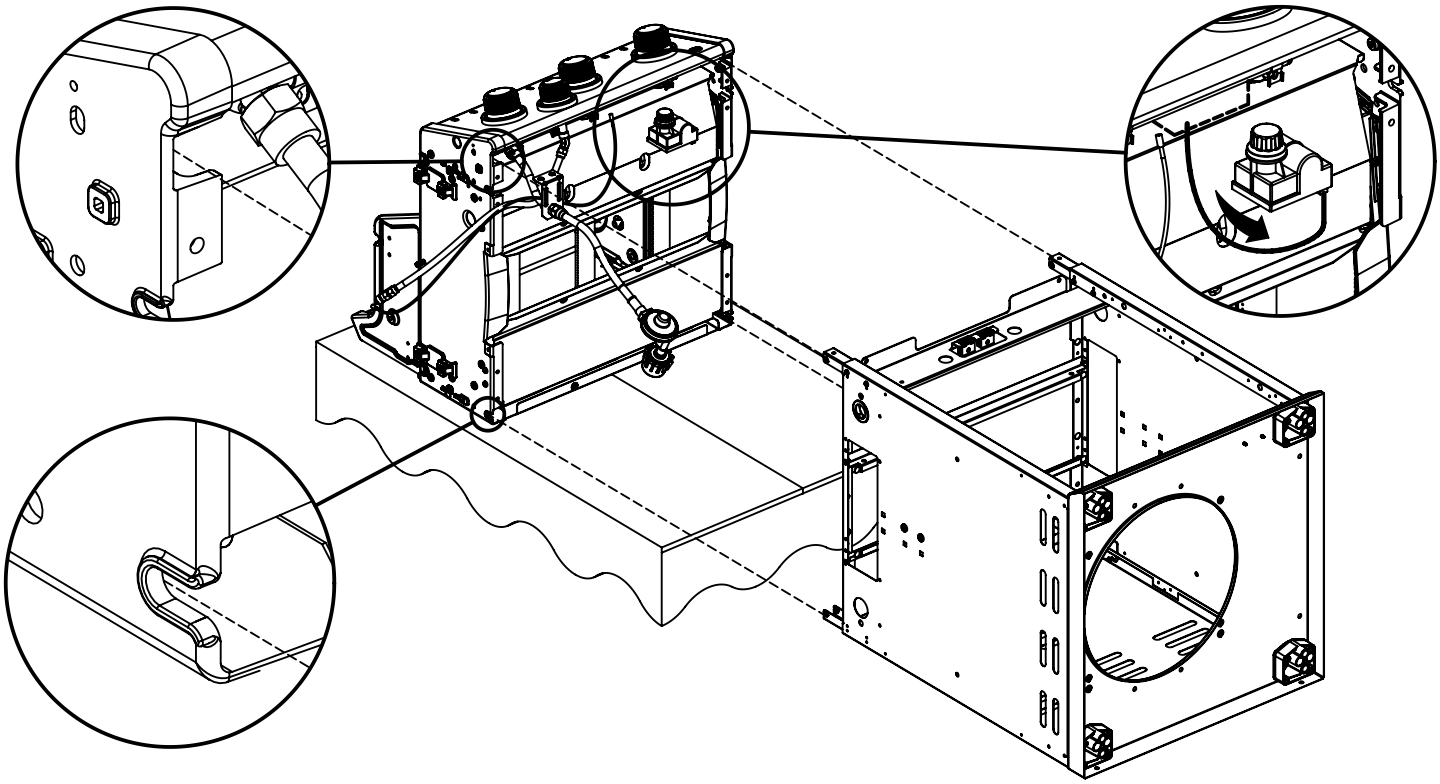

7	(2) 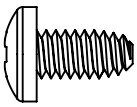

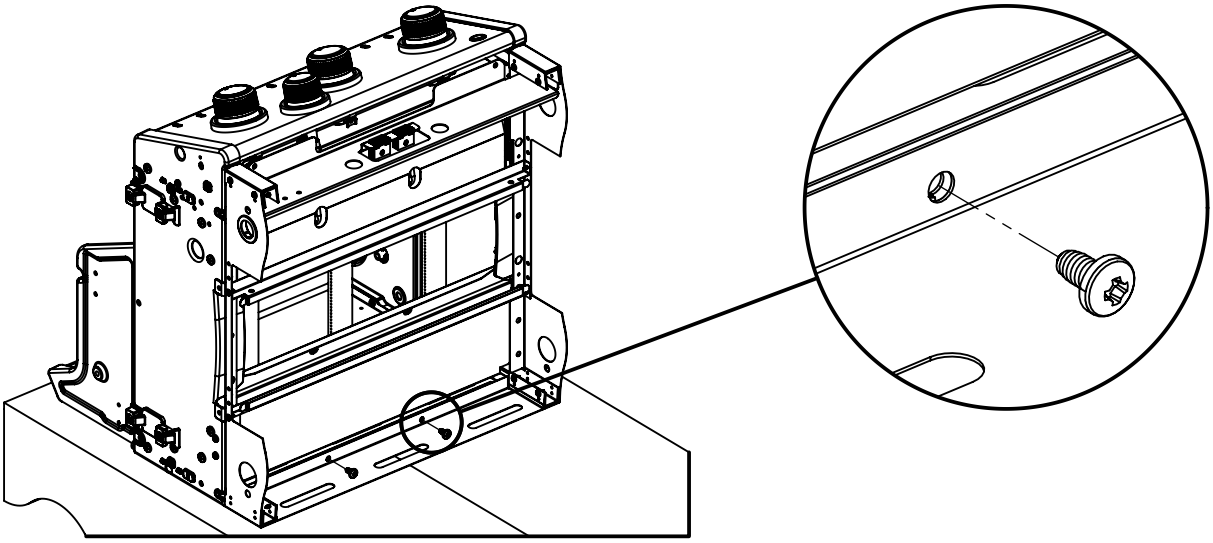

8	(4) 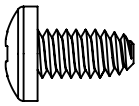

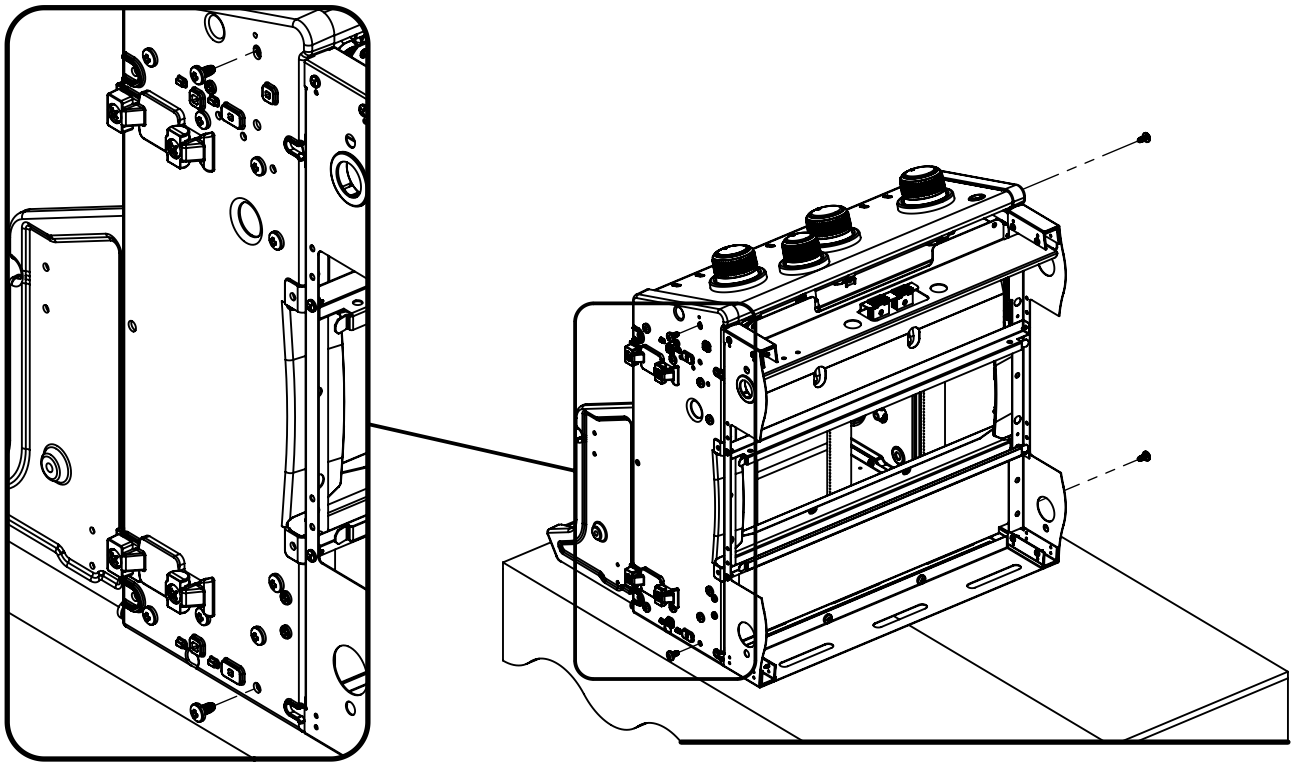

9	(2) 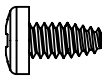

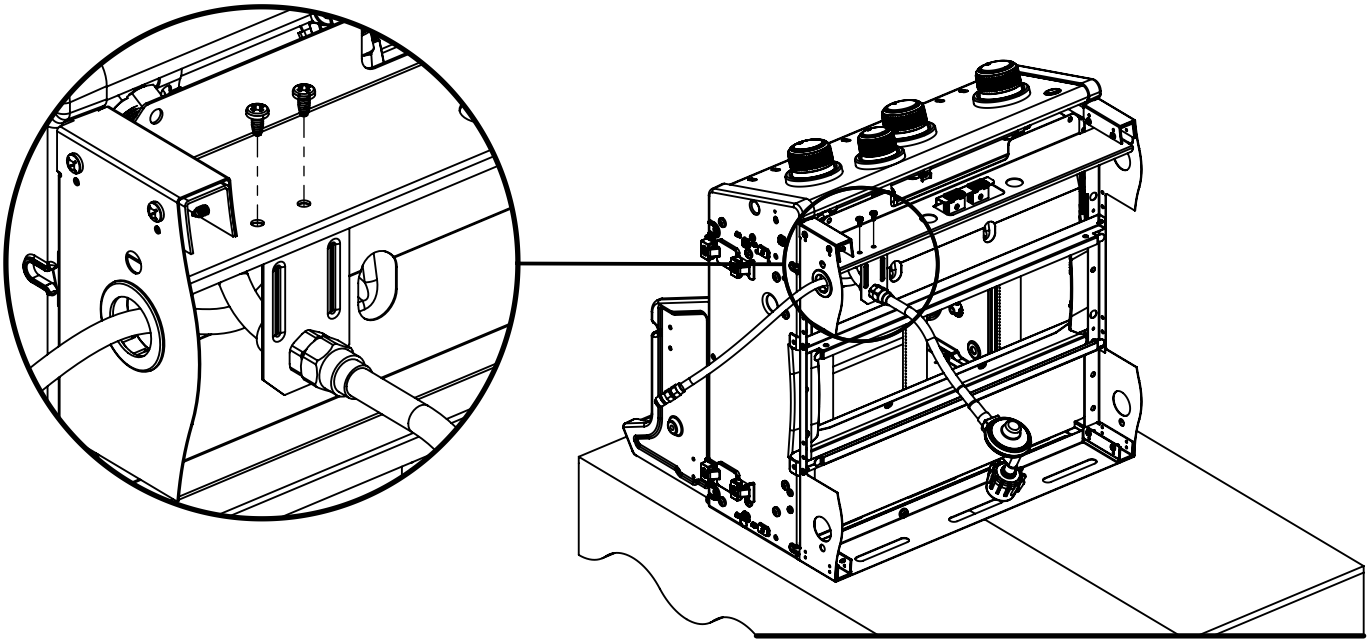

10	(1)

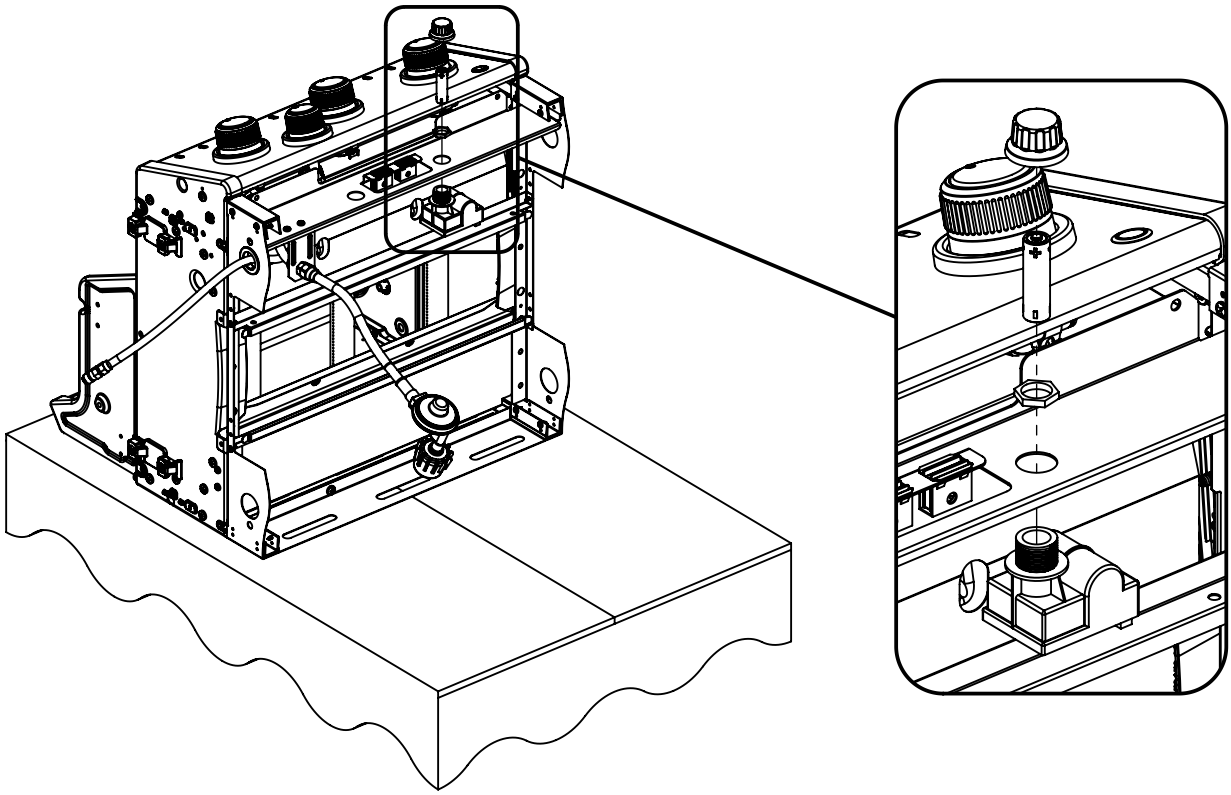

11	(4) 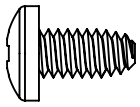 (4) 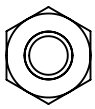

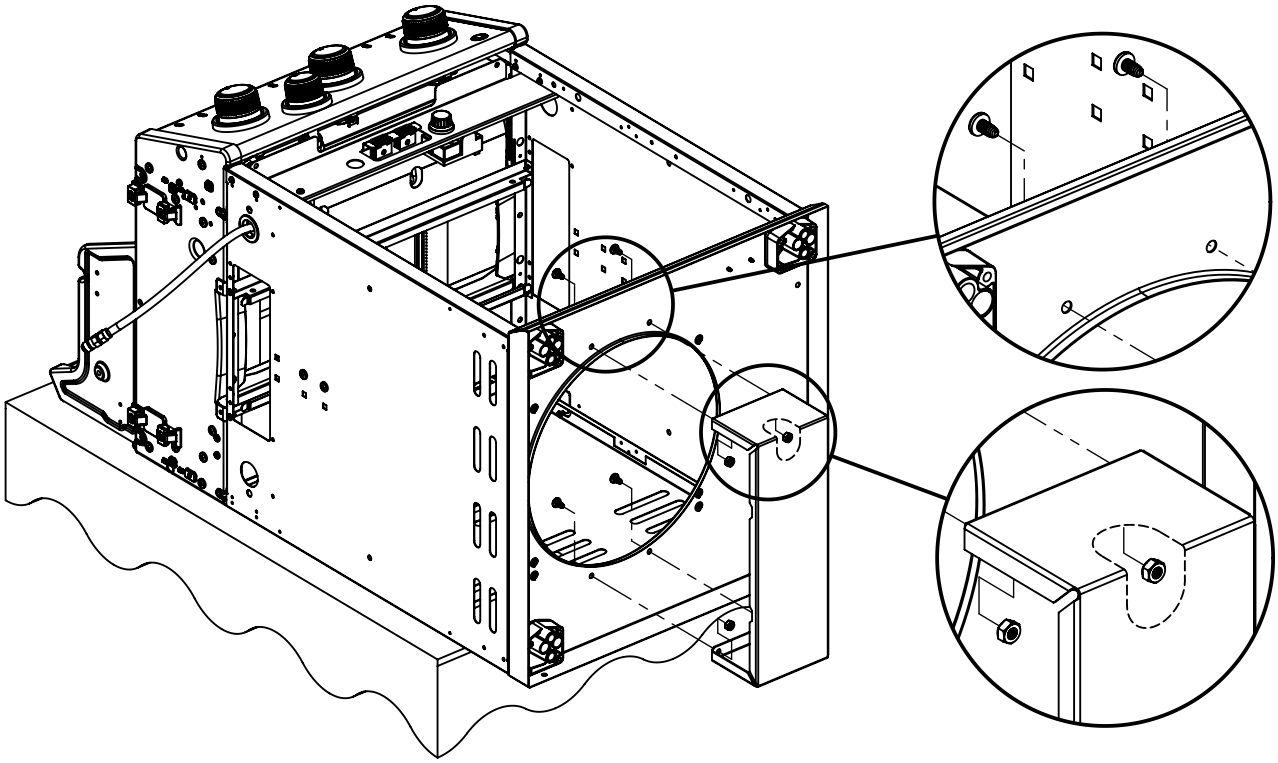

12	(2) 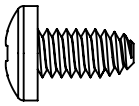 (2) 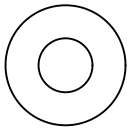 (1) 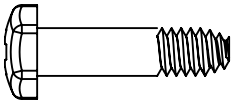 (1) 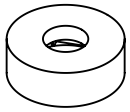

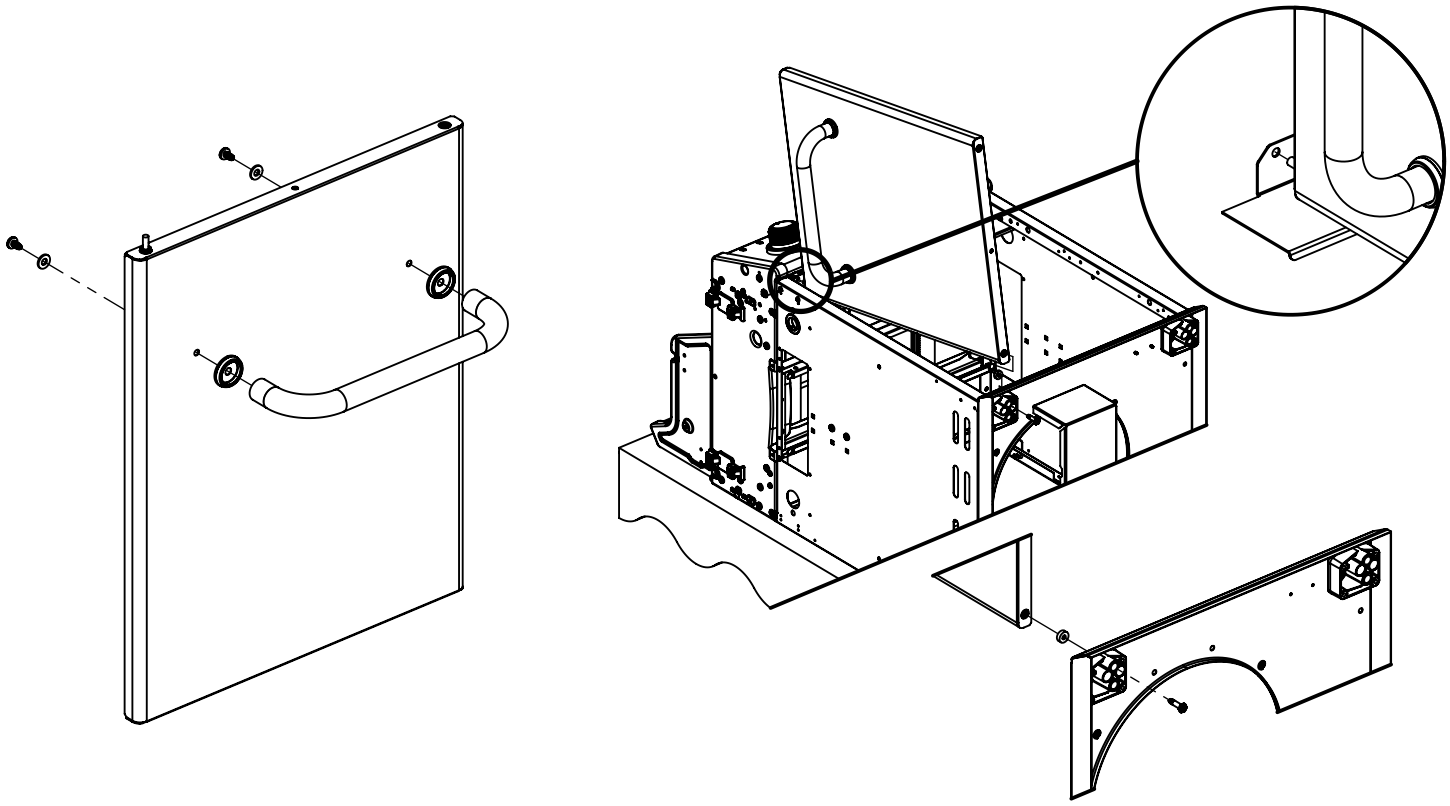

13	

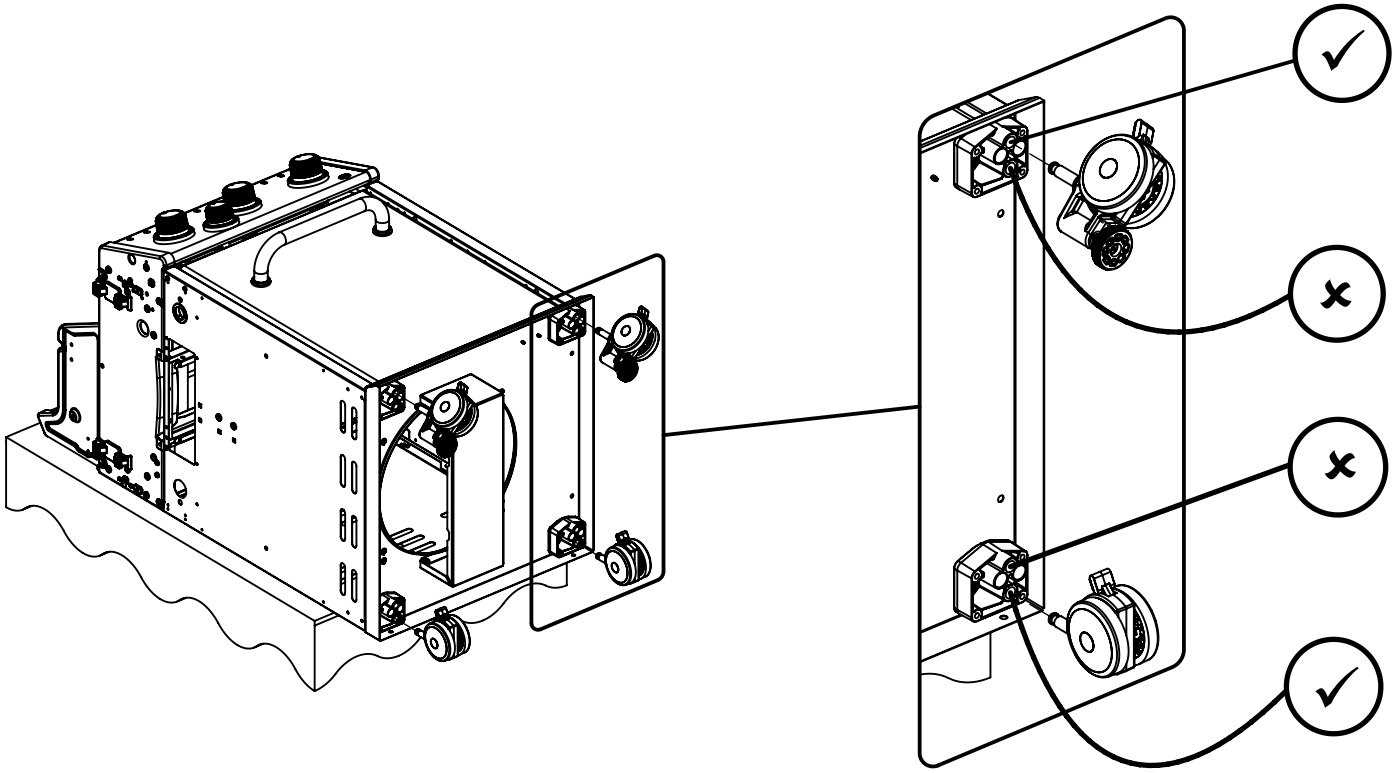

14	

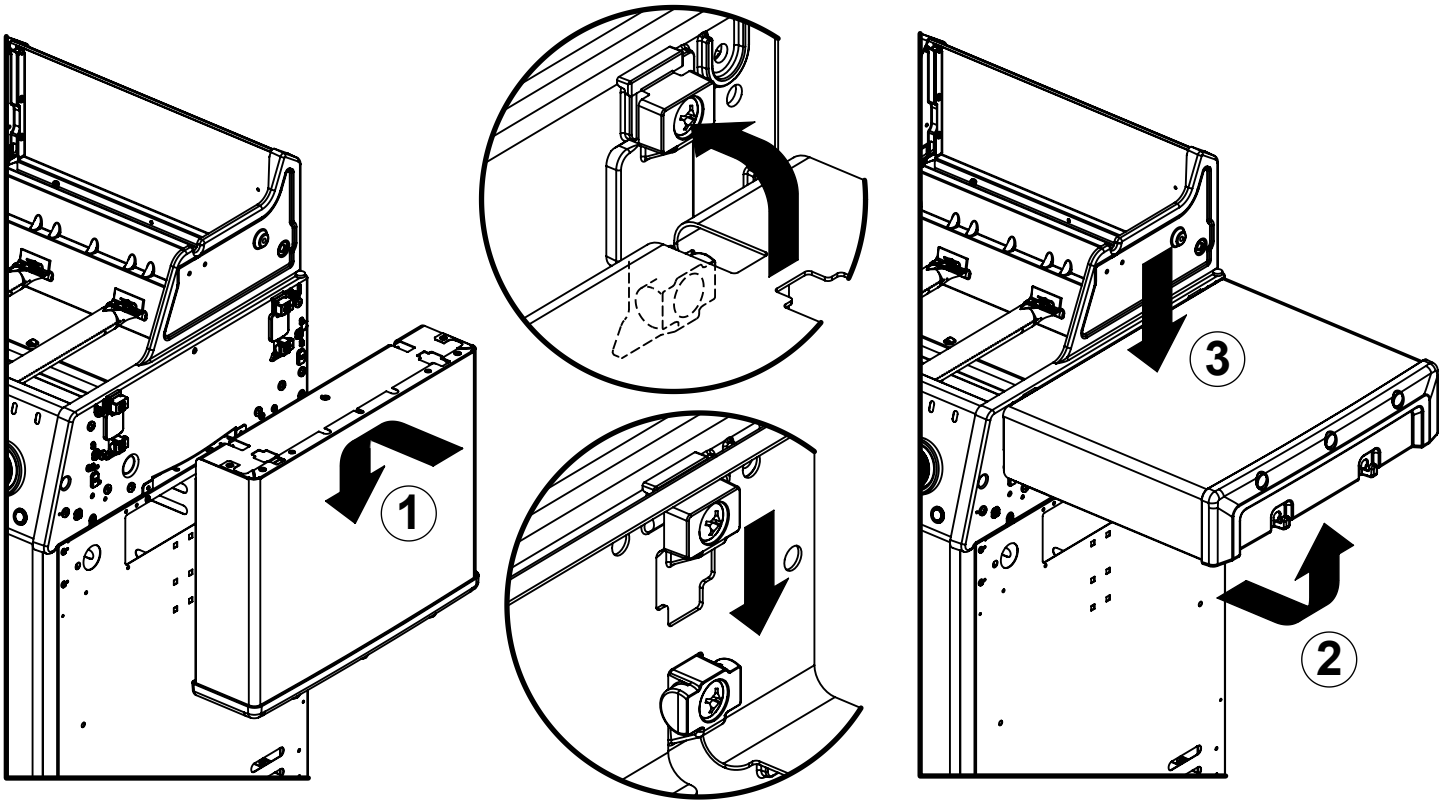

15	

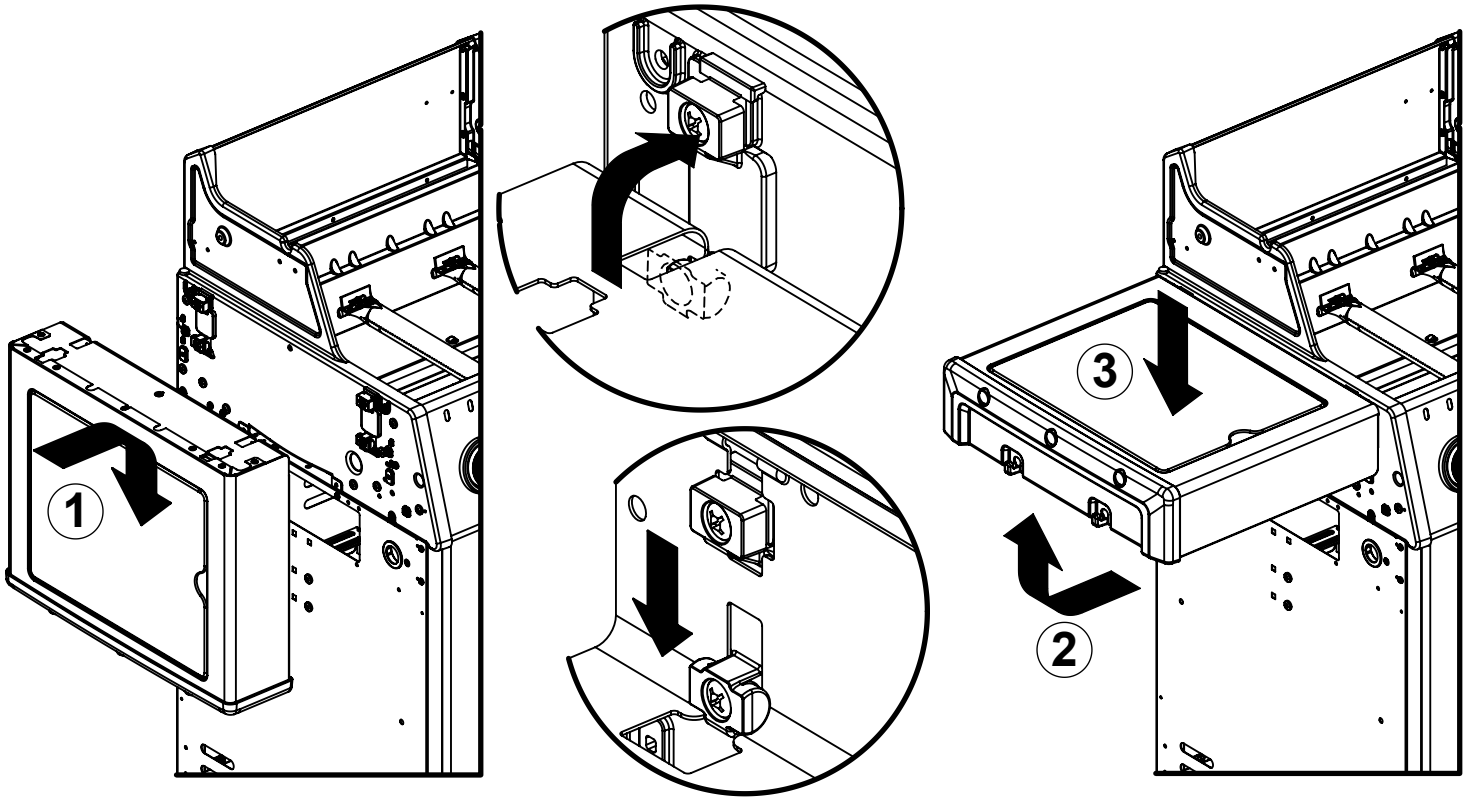

16	(2) 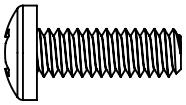

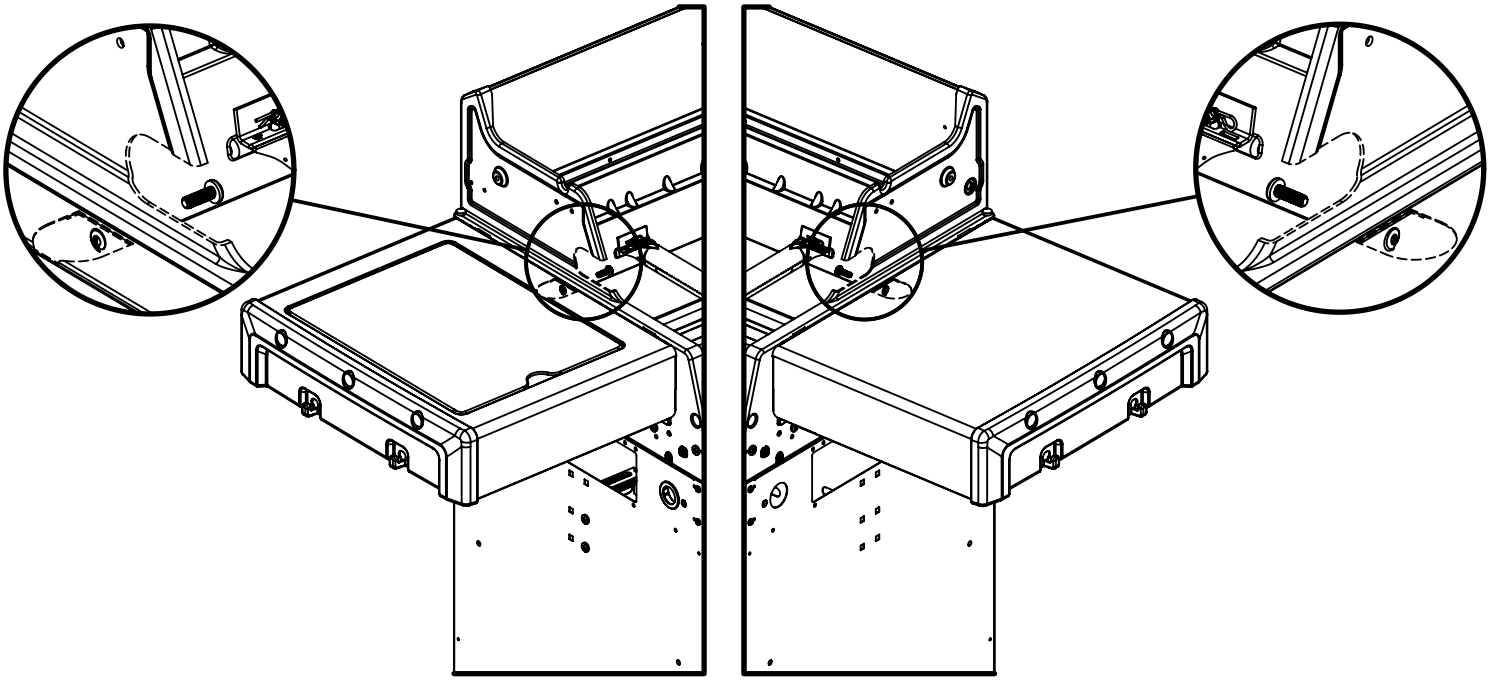

17	

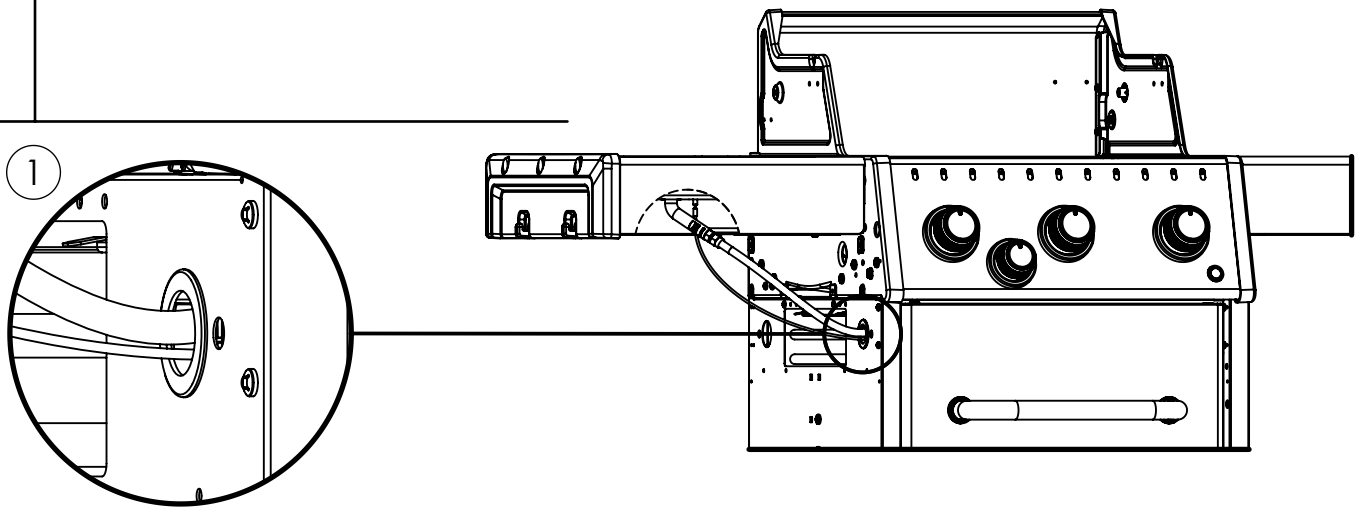

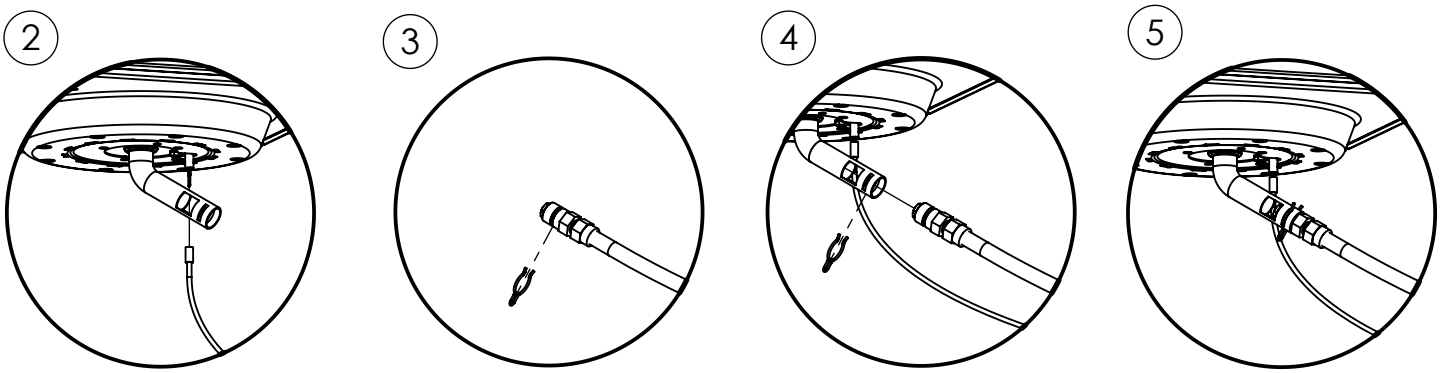

18	

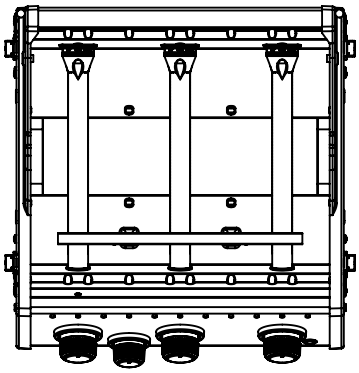

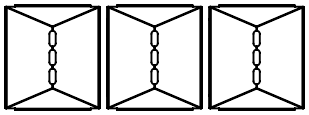

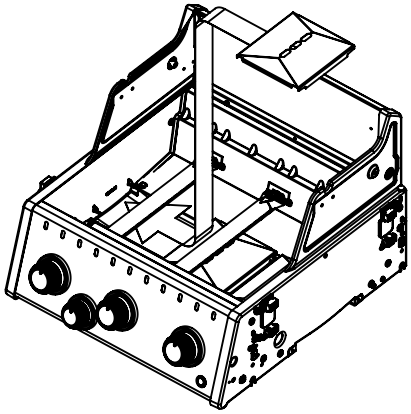

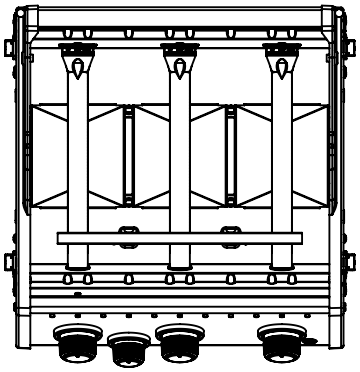

19	

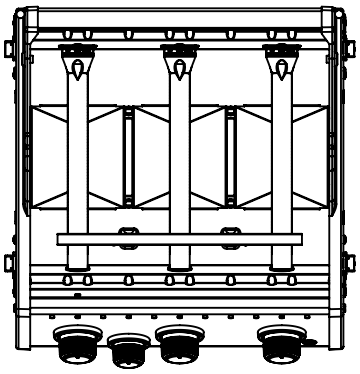

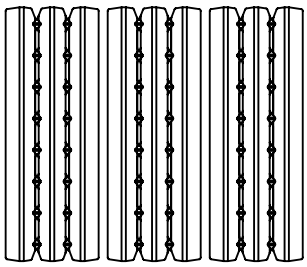

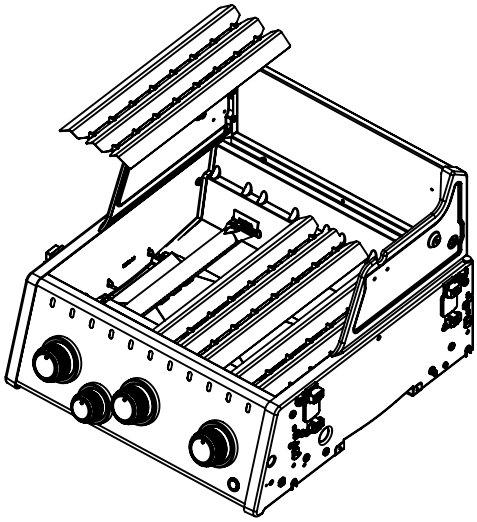

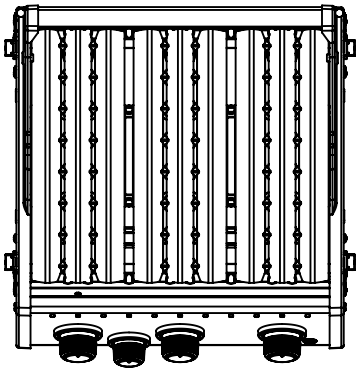

20	(2) 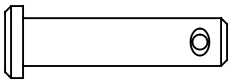 (2) 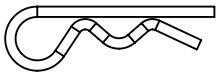

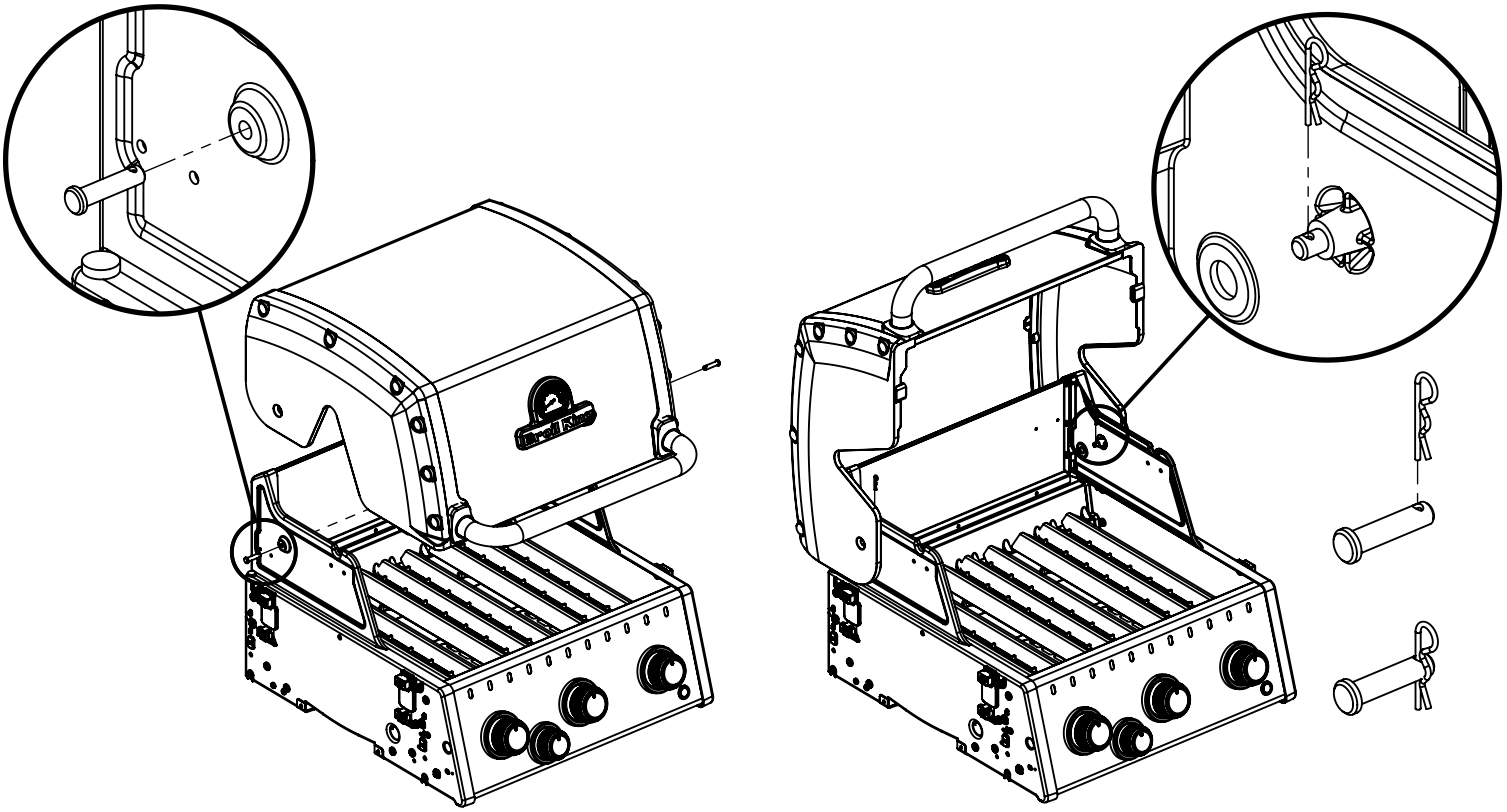

21	

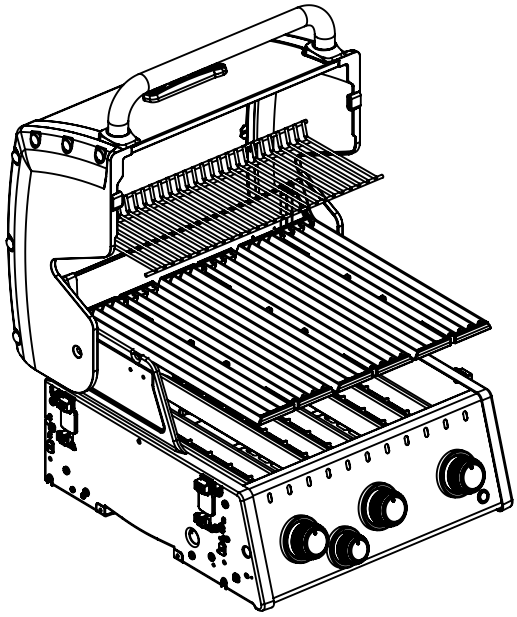

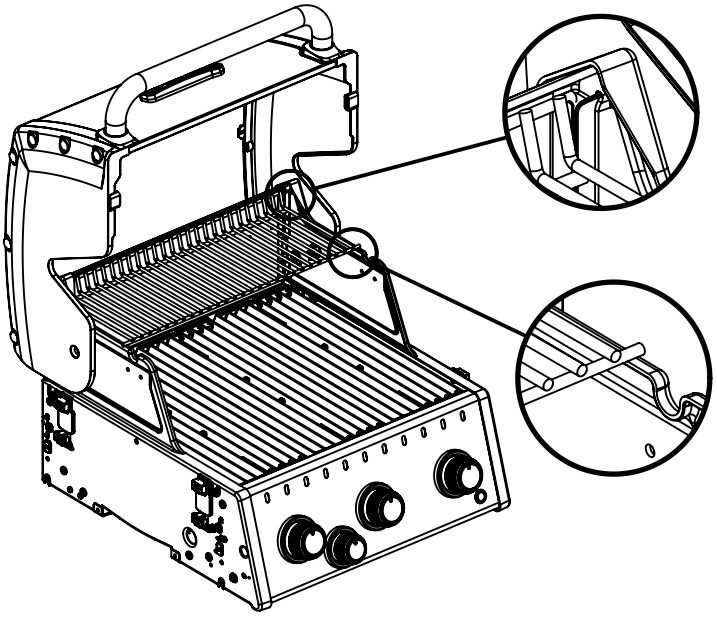

22	(1) 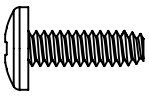 (1) 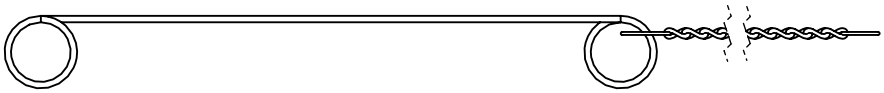

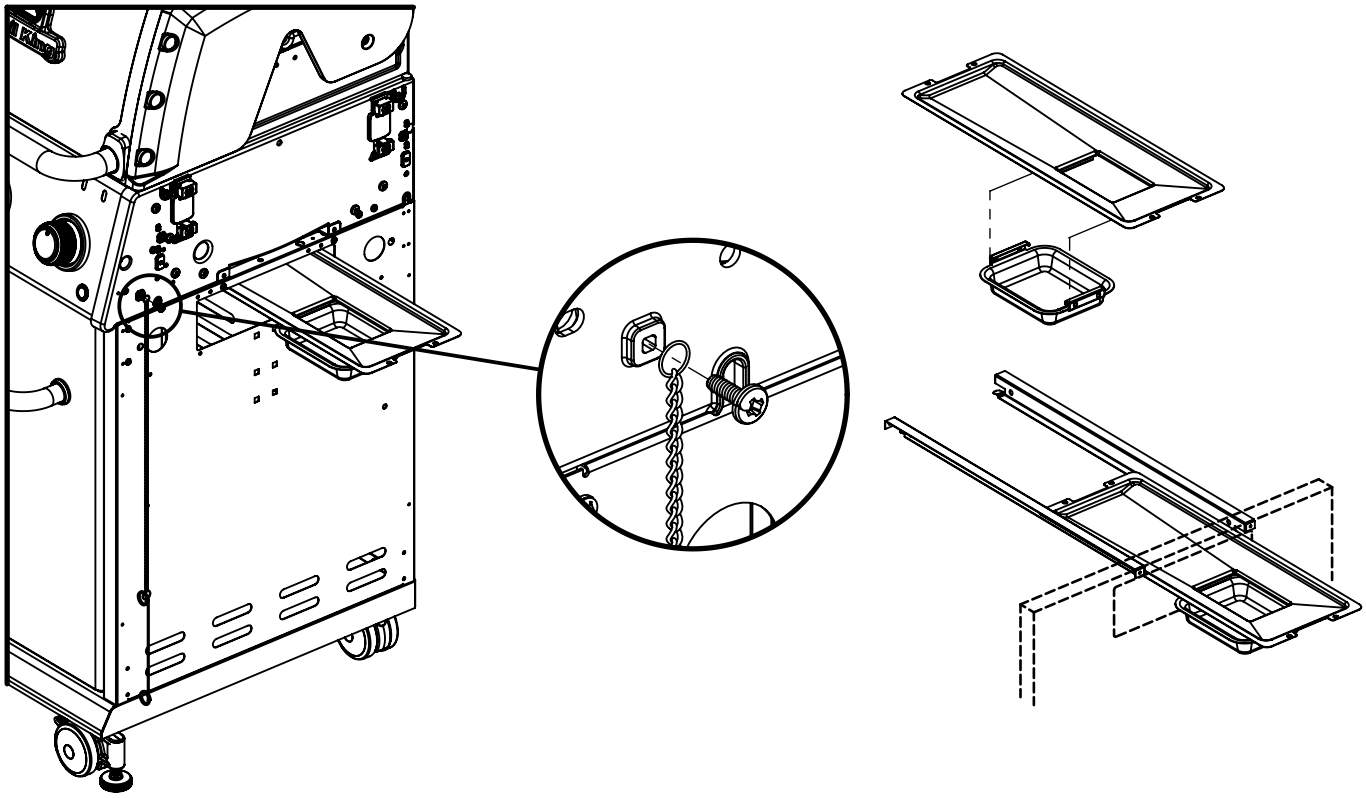

23	

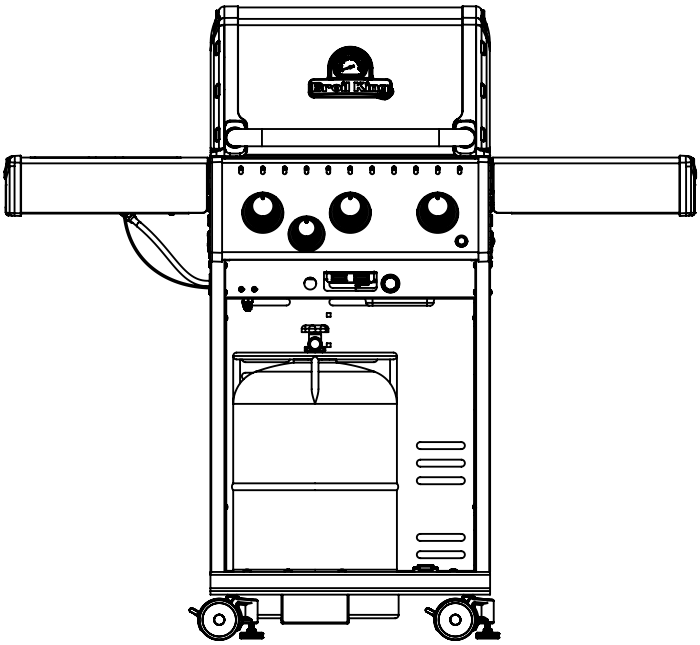

KEY #	ITEM #	DESCRIPTION	9219-52	9219-53	9215-52	9215-53	9219-62	9219-63	9215-62	9215-63
1	66003-304	LID	•	•	1	1	•	•	1	1
	66003-301		1	1	•	•	1	1	•	•
5	10081-BK630	NAMEPLATE	1	1	1	1	1	1	1	1
6	10571-6	HEAT INDICATOR	1	1	1	1	1	1	1	1
7	24004-12A	HANDLE	1	1	1	1	1	1	1	1
8	54009-936	HANDLE BEZEL	2	2	2	2	2	2	2	2
10	52104-074	FIREBOX	1	1	1	1	1	1	1	1
13	53139-988	SHELF BRACKET	4	4	4	4	4	4	4	4
15	52224-224A	COLLECTOR BOX	1	1	1	1	1	1	1	1
17	27249-904	GREASE SHEILD	3	3	3	3	3	3	3	3
25	52909-104D	BURNER - MAIN	3	•	3	•	3	•	3	•
	52909-104E		•	3	•	3	•	3	•	3
	52909-104NGE		•	•	•	•	•	•	•	•
28	52023-244BAR	CONTROL COVER	•	•	•	•	1	1	1	1
	52023-124BAR		1	1	1	1	•	•	•	•
29	59004-032	CONTROL ASSEMBLY	•	•	•	•	1	•	1	•
	59004-033		•	•	•	•	•	1	•	1
	59004-012		1	•	1	•	•	•	•	•
	59004-013		•	1	•	1	•	•	•	•
30	S13473-073	HOSE - SIDE BURNER	•	•	•	•	1	•	1	•
	S13473-079		•	•	•	•	•	1	•	1
	S13473-118		•	•	•	•	•	•	•	•
32	10111-15A	HOSE	1	1	1	1	1	1	1	1
38	22002-264	CONTROL BEZEL	3	3	3	3	3	3	3	3
39	22001-164	CONTROL BEZEL	•	•	•	•	1	1	1	1
40	22001-768	CONTROL KNOB	3	3	3	3	3	3	3	3
41	22001-668	CONTROL KNOB	•	•	•	•	1	1	1	1
42a	10342-43	ELECTRONIC IGNITOR	•	•	•	•	1	1	1	1
	10342-42		1	1	1	1	•	•	•	•
42b	25070-93	IGNITION BUTTON	1	1	1	1	1	1	1	1
42c	525070-92	IGNITION HARNESS	1	1	1	1	1	1	1	1
43	10342-E13	ELECTRODE	2	2	2	2	2	2	2	2
44	52209-404	FLAV-R-WAVE ®	3	3	3	3	3	3	3	3
45a	52005-281	GRID	3	3	3	3	3	3	3	3
45b	52006-281	GRID	•	•	•	•	•	•	•	•
46	52004-991	GRID - WARMING RACK	1	1	1	1	1	1	1	1
47	57054-901	GREASE TRAY	1	1	1	1	1	1	1	1
48	52009-901	GREASE PAN	1	1	1	1	1	1	1	1
49	21034-991	GREASE TRAY - RAIL	2	2	2	2	2	2	2	2
50	51274-134A	DOOR	•	•	1	1	•	•	1	1
	51274-131A		1	1	•	•	1	1	•	•
57	21106-13	DOOR HANDLE	1	1	1	1	1	1	1	1
58	21070-13	HANDLE BEZEL	2	2	2	2	2	2	2	2
60	21109-905	CABINET - SIDE PANEL	2	2	2	2	2	2	2	2
61	21303-925	CABINET - REAR PANEL	1	1	1	1	1	1	1	1

KEY #	ITEM #	DESCRIPTION	9219-52	9219-53	9215-52	9215-53	9219-62	9219-63	9215-62	9215-63
65	51614-235	CABINET - LOWER BASE	1	1	1	1	1	1	1	1
66	21039-301	TANK BRACKET	1	1	1	1	1	1	1	1
67	51334-211	MAGNET BRACKET	1	1	1	1	1	1	1	1
68	57139-13	CONNECTION BRACKET	4	4	4	4	4	4	4	4
73	51639-908	CASTER BRACKET	4	4	4	4	4	4	4	4
74	10892-286	CASTER	2	2	2	2	2	2	2	2
75	10892-287	CASTER – LEVELING	2	2	2	2	2	2	2	2
80	53150-614	SIDE SHELF	2	2	2	2	1	1	1	1
82	53150-654	SIDE SHELF - SIDE BURNER	•	•	•	•	1	1	1	1
86	10390-E10D	SIDE BURNER	•	•	•	•	1	•	1	•
	10390-E10E		•	•	•	•	•	1	•	1
	10390-E10ENG		•	•	•	•	•	•	•	•
87	23004-271	SIDE BURNER - BODY	•	•	•	•	1	1	1	1
88	23000-254	SIDE BURNER - COVER	•	•	•	•	1	1	1	1
89	53140-981	SIDE BURNER GRID	•	•	•	•	1	1	1	1
92	10342-T21	SIDE BURNER ELECTRODE	•	•	•	•	1	1	1	1
100	Y-12220	GROMMET	•	•	•	•	1	1	1	1
125	Y-12835	SCREW - #6 X 1/4	•	•	•	•	2	2	2	2
127	S21125	SCREW - #8 X 3/8	8	8	8	8	8	8	8	8
128	S21124	SCREW - #8 X 1/2	4	4	4	4	4	4	4	4
130	Y-12641	SCREW - SHOULDER #8 X 1/2	•	•	•	•	2	2	2	2
131	S21136	SCREW - #8-32 X 1/2	6	6	6	6	8	8	8	8
132	Y-29304	SCREW - #10-24 X 3/8	2	2	2	2	2	2	2	2
135	S35094	SCREW - #10-24 X 5/8	1	1	1	1	1	1	1	1
140	Y-12865	SCREW - 1/4-20 X 1/2	22	22	22	22	22	22	22	22
141	Y-12310	SCREW - 1/4-20 X 3/4	2	2	2	2	2	2	2	2
142	Y-12860	SCREW - 1/4-20 X 1	2	2	2	2	2	2	2	2
143	Y-11559	SCREW - 1/4-20 X 1	8	8	8	8	8	8	8	8
151	Y-11793	NUT - 1/4-20	4	4	4	4	4	4	4	4
160	Y-12857	WASHER	2	2	2	2	2	2	2	2
169	Y-11230	RETAINER CLIP	•	•	•	•	1	1	1	1
170	S21235	HINGE PIN	2	2	2	2	2	2	2	2
171	S21233	CLIP	2	2	2	2	2	2	2	2
173	10240-20	DOOR HINGE PIN - TOP	1	1	1	1	1	1	1	1
175	Y-11551	DOOR SCREW	1	1	1	1	1	1	1	1
176	Y-12124	DOOR HINGE COVER	1	1	1	1	1	1	1	1
177	Y-12222	MAGNET	1	1	1	1	1	1	1	1
178	Y-12223	MAGNET - SNAP IN	1	1	1	1	1	1	1	1
180	SP25-11	LID BUMPER	2	2	2	2	2	2	2	2
181	Y-11231	LID BUMPER - ROUND	2	2	2	2	2	2	2	2
182	20005-000	MATCH LIGHT CHAIN	1	1	1	1	1	1	1	1
186	Y-11544	BURNER SCREW	3	3	3	3	3	3	3	3
187	S21242	CLIP	3	3	3	3	3	3	3	3

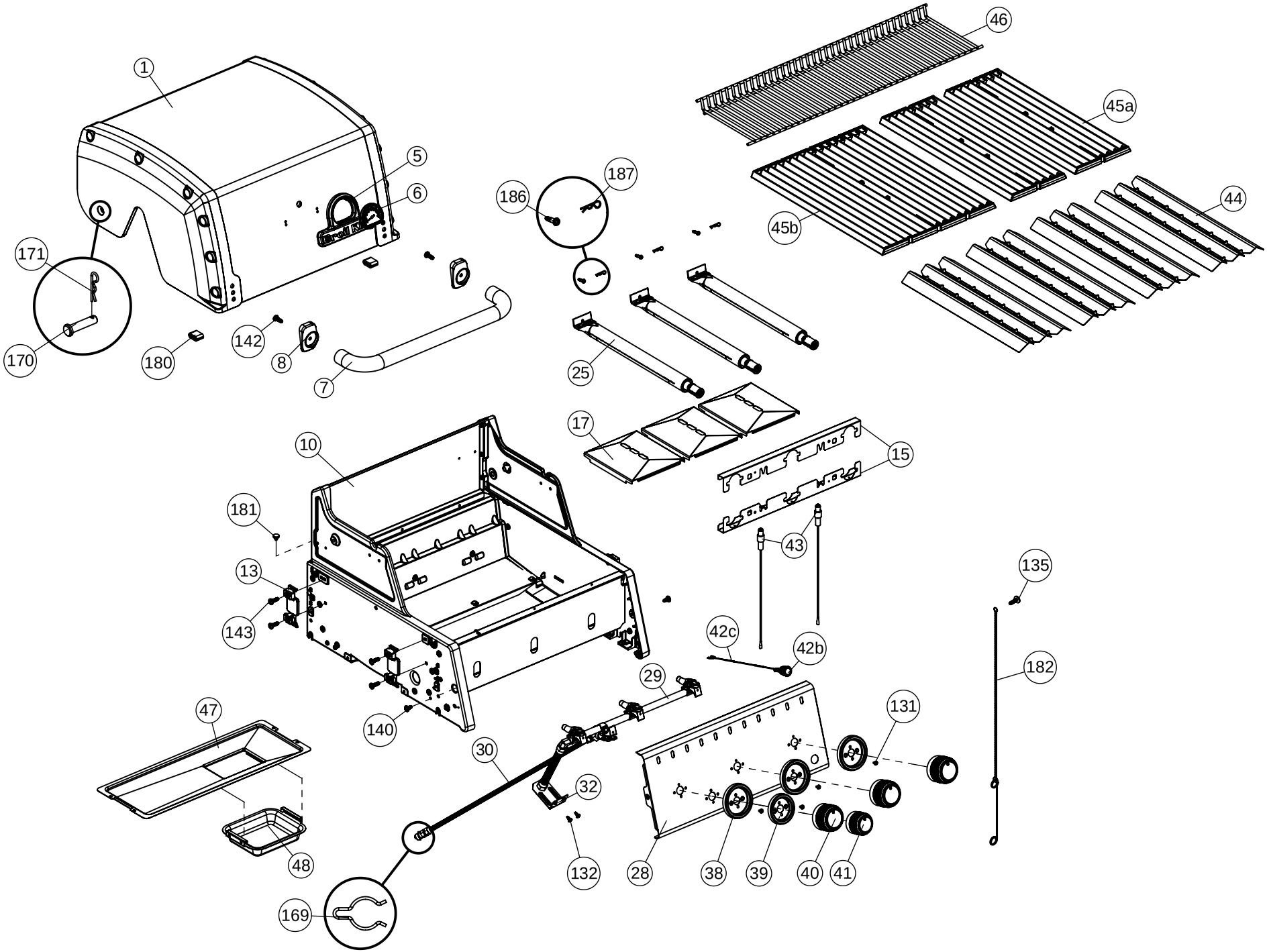
1
5
6
171
170
180
142
8
7
186
187
25
17
10
181
13
143
140
47
48
169
30
32
132
29
28
38
39
40
41
131
42c
42b
43
15
135
182
46
45a
45b
44

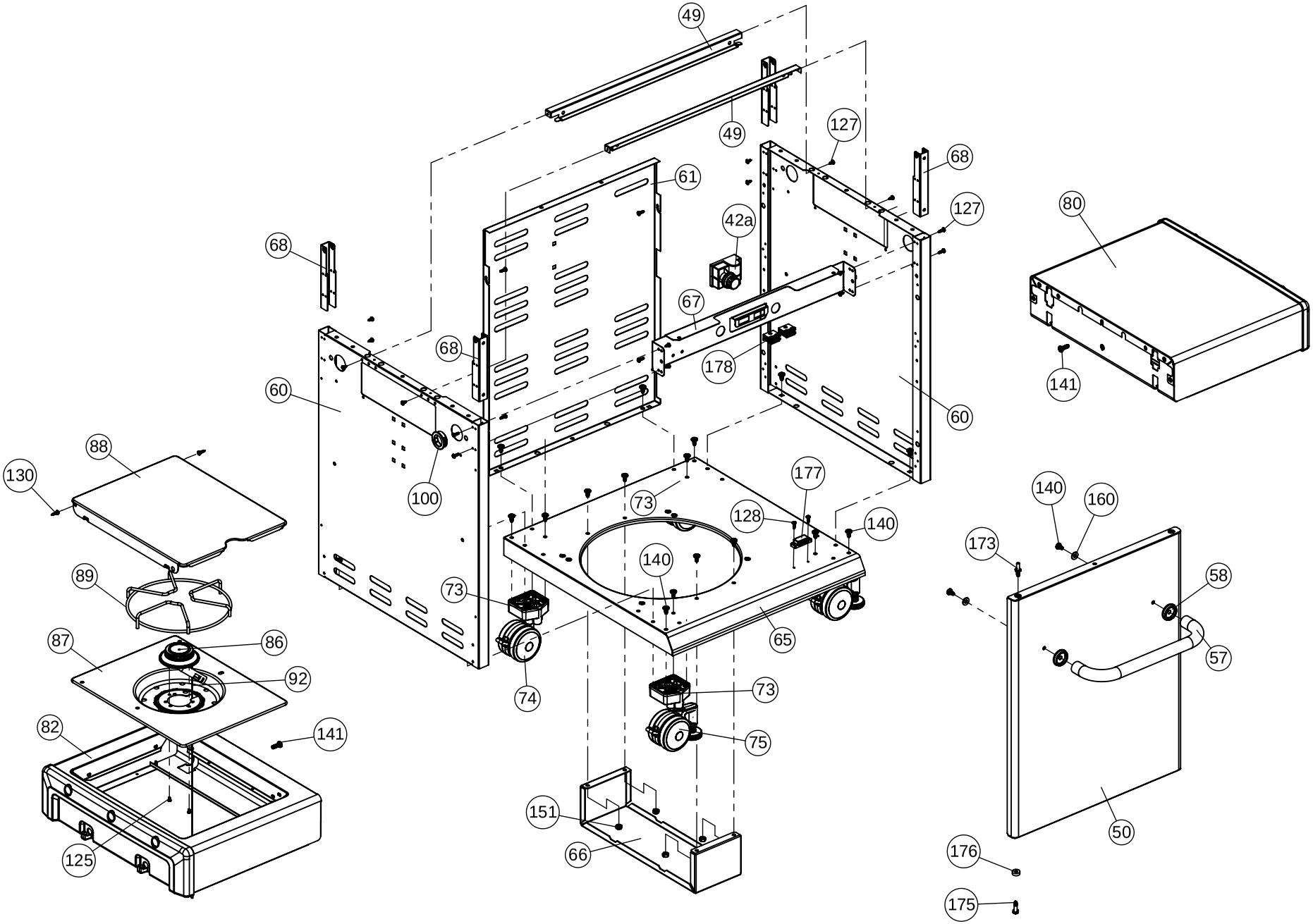
49
49
127
68
61
127
80
42a
68
67
68
178
141
60
60
88
130
100
177
73
140
160
128
140
173
140
89
73
58
65
87
86
57
92
74
73
82
141
75
151
50
66
176
125
175